CONSTRUCTION DRAWINGS

FOR THE

WESTERN REGIONAL WATER SUPPLY FACILITY IMPROVEMENTS PHASE 3B

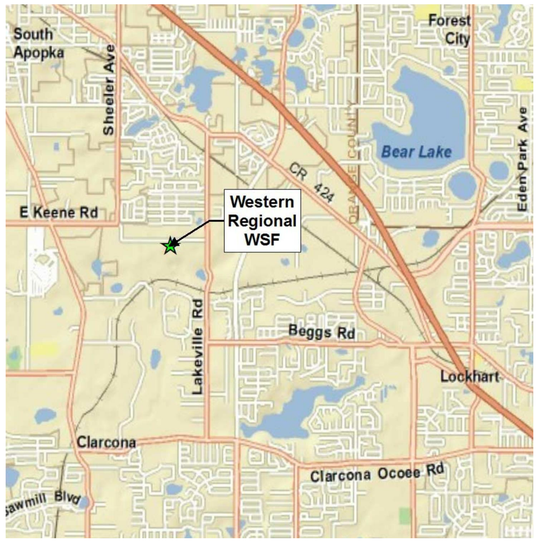

PROJECT LOCATION MAP

SCALE: NTS

PREPARED FOR THE

ORANGE COUNTY, FLORIDA
BOARD OF COUNTY COMMISSIONERS

ORANGE COUNTY MAYOR	TERESA JACOBS
COMMISSIONER DISTRICT 1	BETSY VANDERLEY
COMMISSIONER DISTRICT 2	ROD A. LOVE
COMMISSIONER DISTRICT 3	PETE CLARKE
COMMISSIONER DISTRICT 4	JENNIFER THOMPSON
COMMISSIONER DISTRICT 5	EMILY BONILLA
COMMISSIONER DISTRICT 6	VICTORIA P. SIPLIN
AJIT LALCHANDANI	COUNTY ADMINISTRATOR
RAYMOND HANSON P.E.	DIRECTOR OF UTILITIES

ORANGE COUNTY FILE No. 89626

ORANGE COUNTY ORG/SUBORG #1532-15

PREPARED FOR

UTILITIES ENGINEERING
ORANGE COUNTY, FLORIDA

PREPARED BY

TETRA TECH
Infrastructure Offices Throughout Florida
Engineering Business No. 2429

201 EAST PINE STREET – SUITE 1000 – ORLANDO, FL 32801
TELEPHONE (407) 839-3955 – FAX (407) 839-3790 – WWW.TETRATECH.COM

AUGUST 2018

BID SET

TT NO. 200-158870-16001

\\TT51815F51\Projects\IER\158870\200-158870-16001\CAD\SheetFiles\COVER.dwg

Plotted: Aug 22, 2018 – 9:57am by jon.evans

GENERAL NOTES

1. THE CONTRACTOR SHALL ENSURE ALL NECESSARY PERMITS ARE IN HAND BEFORE COMMENCEMENT OF CONSTRUCTION. THE CONTRACTOR SHALL BE RESPONSIBLE FOR SATISFYING ALL REQUIREMENTS OF REGULATORY AGENCY PERMITS IN REGARD TO CONSTRUCTION ACTIVITIES AND CONDITIONS STATED.

2. ALL LABOR, MATERIALS AND METHODS OF CONSTRUCTION SHALL BE IN STRICT ACCORDANCE WITH THE MINIMUM ENGINEERING AND CONSTRUCTION STANDARDS ADOPTED BY THE ORANGE COUNTY UTILITIES. WHERE CONFLICTS OR OMISSIONS EXIST, THE ORANGE COUNTY UTILITIES STANDARDS SHALL DICTATE. SUBSTITUTIONS AND DEVIATION FROM PLANS AND SPECIFICATIONS SHALL BE PERMITTED ONLY WHEN WRITTEN APPROVAL HAS BEEN ISSUED BY THE ENGINEER.

3. TOPOGRAPHIC INFORMATION SHOWN ON THESE PLANS WERE TAKEN FROM SURVEY PROVIDED BY APEX ENGINEERING, INC. (P.O. BOX 568891, ORLANDO, FL 32856-8891, PHONE 407-306-0904) AND SUPPLEMENTAL INFORMATION IS PROVIDED BY TETRA TECH (201 E. PINE ST., SUITE 1000 ORLANDO, FL 32801.)

4.

5. THE CONTRACTOR SHALL EXERCISE EXTREME CAUTION WHEN EXCAVATING IN PROXIMITY OF WATER MAINS, WASTEWATER FORCE MAINS, GRAVITY MAINS, RECLAIMED WATER MAINS, POWER LINES, FIBER OPTIC LINES AND IRRIGATION LINES. MAIN LOCATIONS SHOWN ON PLANS ARE NOT EXACT OR GUARANTEED. CONTRACTOR IS RESPONSIBLE FOR FIELD VERIFYING EXISTING UTILITY LOCATIONS.

6. IMMEDIATELY AT THE ONSET OF CONSTRUCTION AND PRIOR TO ANY EXCAVATION CONTRACTOR, SHALL FIELD VERIFY HORIZONTAL AND VERTICAL LOCATIONS OF ALL EXISTING SUBSURFACE UTILITIES AND STRUCTURES WITHIN THE CONSTRUCTION LIMITS INCLUDING WATER, SEWER, RECLAIMED WATER, STORMWATER, POWER, TELEPHONE, GAS, FIBER OPTIC AND CABLE TV. CONTRACTOR SHALL UTILIZE GROUND PENETRATING RADAR (GPR) AND OTHER ELECTRONIC METHODS TO LOCATE THE SUBSURFACE FACILITIES AND THEN PERFORM VACUUM EXCAVATIONS AND OTHER EXPLORATORY EXCAVATION METHODS TO VERIFY HORIZONTAL AND VERTICAL LOCATIONS. CONTRACTOR SHALL EVALUATE POTENTIAL CONFLICTS IN A WRITTEN REPORT. ANY CONFLICTS SHALL BE REPORTED TO THE ENGINEER / OWNER IMMEDIATELY UPON DISCOVERY AND IN A DETAILED WRITTEN REPORT.

7. THE COUNTY UTILITIES DISPATCH OPERATOR (407-836-2777) SHALL BE NOTIFIED BY THE CONTRACTOR FOR PIPE EMERGENCIES.

8. COUNTY UTILITIES ENGINEERING AND CONSTRUCTION DIVISION: 407-254-9900.

9. ALL EXISTING WATER, FORCE, GRAVITY AND RECLAIMED WATER MAINS AND OTHER FACILITIES WITHIN THE LIMITS OF THE PROJECT SHALL BE SUPPORTED AND PROTECTED AGAINST DAMAGE DURING CONSTRUCTION.

10. CONTRACTOR SHALL ADJUST VALVE BOXES, AIR RELEASE VALVES, FIRE HYDRANTS, MANHOLE COVERS, ETC IN CONFLICT WITH ROADWAY.

11. THE CONTRACTOR, AT THE CONTRACTOR'S EXPENSE, SHALL IMMEDIATELY REPAIR ALL DAMAGES TO COUNTY'S MAINS AND FACILITIES. IF THE REPAIR IS NOT MADE IN A TIMELY MANNER, AS DETERMINED BY COUNTY, COUNTY MAY PERFORM REQUIRED REPAIRS AND CLEANUP. THE CONTRACTOR WILL BE CHARGED FOR ALL EXPENSES ASSOCIATED WITH THE REPAIR.

12. COUNTY UTILITIES CONSTRUCTION DIVISION SHALL BE NOTIFIED AT LEAST SEVEN (7) DAYS PRIOR TO ANY CONSTRUCTION ACTIVITY WITHIN PROXIMITY OF ANY UTILITIES.

13. ONLY COUNTY SHALL OPERATE WATER, WASTEWATER, AND RECLAIMED WATER VALVES. COORDINATE VALVE OPERATION WITH APPROPRIATE COUNTY INSPECTOR.

14. ALL NEW VALVES BEING INSTALLED SHALL REMAIN CLOSED DURING CONSTRUCTION. KEEP VALVES ON ALL WET TAPS CLOSED UNTIL CLEARED BY FDEP. DO NOT CONNECT ANY PROPOSED WATER MAIN TO ANY EXISTING WATER MAIN UNLESS CLEARED BY FDEP AND THE COUNTY.

15. THE UTILITY IMPROVEMENTS AND ADJUSTMENTS SHOWN ON THESE PLANS ARE INTENDED TO MAINTAIN THE INTEGRITY OF THE ORANGE COUNTY WATER, WASTEWATER AND RECLAIMED WATER SYSTEMS. ALL MATERIALS AND CONSTRUCTION SHALL BE IN ACCORDANCE WITH THE ORANGE COUNTY UTILITIES STANDARD AND CONSTRUCTION SPECIFICATION MANUAL. THE PLANS DO NOT INCLUDE WORK PERFORMED ON OR FOR UTILITY SYSTEMS OWNED BY OTHERS, UNLESS STATED OTHERWISE ON THE PLANS.

16. ALL EXISTING AND NEW ORANGE COUNTY UTILITIES VALVES, VALVE BOXES, AND MANHOLES SHALL BE PROTECTED AND ADJUSTED TO FINISHED GRADE AS SHOWN ON THE DRAWINGS. ALL EXISTING ABOVE GROUND VALVES TO BE RELOCATED, AS REQUIRED.

17. FLUSH OUT NEW WATER MAIN WITH POTABLE WATER (USE "JUMPER" ASSEMBLY WITH BACKFLOW PREVENTER TO MAKE TEMPORARY CONNECTIONS TO AN EXISTING WATER SOURCE.) CONTRACTOR SHALL COORDINATE WITH COUNTY TO DETERMINE THE LOCATION OF CONNECTION TO EXISTING WATER MAIN.

18. THE LOCATION OF WATER MAINS SHALL MEET THE REQUIREMETNS OF 62-555.314 F.A.C. THE PHRASE "WATER MAINS" SHALL MEAN MAINS, INCLUDING TREATMENT PLANT PROCESS PIPING, CONVEYING EITHER RAW, PARTIALLY TREATED, OR FINISHED DRINKING WATER; FIRE HYDRANT LEADS; AND SERVICE LINES THAT ARE UNDER THE CONTROL OF A PUBLIC WATER SYSTEM AND THAT HAVE AN INSIDE DIAMETER OF THREE INCHES OR GREATER. THESE REQUIREMENTS INCLUDE THE FOLLOWING:
    A. HORIZONTAL SEPARATION BETWEEN UNDERGROUND WATER MAINS AND SANITARY OR STORM SEWERS, WASTEWATER OR STORMWATER FORCE MAINS, RECLAIMED WATER PIPELINES, AND ONSITE SEWAGE TREATMENT AND DISPOSAL SYSTEMS.
        (I) NEW OR RELOCATED, UNDERGROUND WATER MAINS SHALL BE LAID TO PROVIDE A HORIZONTAL DISTANCE OF AT LEAST THREE FEET BETWEEN THE OUTSIDE OF THE WATER MAIN AND THE OUTSIDE OF ANY EXISTING OR PROPOSED STORM SEWER, STORMWATER FORCE MAIN, OR PIPELINE CONVEYING RECLAIMED WATER REGULATED UNDER PART III OF CHAPTER 62-610, F.A.C.
        (I) NEW OR RELOCATED, UNDERGROUND WATER MAINS SHALL BE LAID TO PROVIDE A HORIZONTAL DISTANCE OF AT LEAST THREE FEET, AND PREFERABLY TEN FEET, BETWEEN THE OUTSIDE OF THE WATER MAIN AND THE OUTSIDE OF ANY EXISTING OR PROPOSED VACUUM-TYPE SANITARY SEWER.
        (III) NEW OR RELOCATED, UNDERGROUND WATER MAINS SHALL BE LAID TO PROVIDE A HORIZONTAL DISTANCE OF AT LEAST SIX FEET, AND PREFERABLY TEN FEET, BETWEEN THE OUTSIDE OF THE WATER MAIN AND THE OUTSIDE OF ANY EXISTING OR PROPOSED GRAVITY- OR PRESSURE-TYPE SANITARY SEWER, WASTEWATER FORCE MAIN, OR PIPELINE CONVEYING RECLAIMED WATER NOT REGULATED UNDER PART III OF CHAPTER 62-610, F.A.C. THE MINIMUM HORIZONTAL SEPARATION DISTANCE BETWEEN WATER MAINS AND GRAVITY-TYPE SANITARY SEWERS SHALL BE REDUCED TO THREE FEET WHERE THE BOTTOM OF THE WATER MAIN IS LAID AT LEAST SIX INCHES ABOVE THE TOP OF THE SEWER.
        (IV) NEW OR RELOCATED, UNDERGROUND WATER MAINS SHALL BE LAID TO PROVIDE A HORIZONTAL DISTANCE OF AT LEAST TEN FEET BETWEEN THE OUTSIDE OF THE WATER MAIN AND ALL PARTS OF ANY EXISTING OR PROPOSED "ONSITE SEWAGE TREATMENT AND DISPOSAL SYSTEM" AS DEFINED IN SECTION 381.0065(2), F.S., AND RULE 64E-6.002, F.A.C.
    B. VERTICAL SEPARATION BETWEEN UNDERGROUND WATER MAINS AND SANITARY OR STORM SEWERS, WASTEWATER OR STORMWATER FORCE MAINS, AND RECLAIMED WATER PIPELINES.
        (I) NEW OR RELOCATED, UNDERGROUND WATER MAINS CROSSING ANY EXISTING OR PROPOSED GRAVITY- OR VACUUM-TYPE SANITARY SEWER OR STORM SEWER SHALL BE LAID SO THE OUTSIDE OF THE WATER MAIN IS AT LEAST SIX INCHES, AND PREFERABLY 12 INCHES, ABOVE OR AT LEAST 12 INCHES BELOW THE OUTSIDE OF THE OTHER PIPELINE. HOWEVER, IT IS PREFERABLE TO LAY THE WATER MAIN ABOVE THE OTHER PIPELINE.
        (II) NEW OR RELOCATED, UNDERGROUND WATER MAINS CROSSING ANY EXISTING OR PROPOSED PRESSURE-TYPE SANITARY SEWER, WASTEWATER OR STORMWATER FORCE MAIN, OR PIPELINE CONVEYING RECLAIMED WATER SHALL BE LAID SO THE OUTSIDE OF THE WATER MAIN IS AT LEAST 12 INCHES ABOVE OR BELOW THE OUTSIDE OF THE OTHER PIPELINE. HOWEVER, IT IS PREFERABLE TO LAY THE WATER MAIN ABOVE THE OTHER PIPELINE.
        (III) AT THE UTILITY CROSSINGS DESCRIBED IN PARAGRAPHS (A) AND (B), ABOVE, ONE FULL LENGTH OF WATER MAIN PIPE SHALL BE CENTERED ABOVE OR BELOW THE OTHER PIPELINE SO THE WATER MAIN JOINTS WILL BE AS FAR AS POSSIBLE FROM THE OTHER PIPELINE. ALTERNATIVELY, AT SUCH CROSSINGS, THE PIPES SHALL BE ARRANGED SO THAT ALL WATER MAIN JOINTS ARE AT LEAST THREE FEET FROM ALL JOINTS IN VACUUM-TYPE SANITARY SEWERS, STORM SEWERS, STORMWATER FORCE MAINS, OR PIPELINES CONVEYING RECLAIMED WATER REGULATED UNDER PART III OF CHAPTER 62-610, F.A.C., AND AT LEAST SIX FEET FROM ALL JOINTS IN GRAVITY- OR PRESSURE-TYPE SANITARY SEWERS, WASTEWATER FORCE MAINS, OR PIPELINES CONVEYING RECLAIMED WATER NOT REGULATED UNDER PART III OF CHAPTER 62-610, F.A.C.
    C. SEPARATION BETWEEN WATER MAINS AND SANITARY OR STORM SEWER MANHOLES.
        (I) NO WATER MAIN SHALL PASS THROUGH, OR COME INTO CONTACT WITH, ANY PART OF A SANITARY SEWER MANHOLE.
        (II) EFFECTIVE AUGUST 28, 2003, WATER MAINS SHALL NOT BE CONSTRUCTED OR ALTERED TO PASS THROUGH, OR COME INTO CONTACT WITH, ANY PART OF A STORM SEWER MANHOLE OR INLET STRUCTURE.
    D. SEPARATION BETWEEN FIRE HYDRANT DRAINS AND SANITARY OR STORM SEWERS, WASTEWATER OR STORMWATER FORCE MAINS, RECLAIMED WATER PIPELINES, AND ONSITE SEWAGE TREATMENT AND DISPOSAL SYSTEMS. NEW OR RELOCATED FIRE HYDRANTS WITH UNDERGROUND DRAINS SHALL BE LOCATED SO THAT THE DRAINS ARE AT LEAST THREE FEET FROM ANY EXISTING OR PROPOSED STORM SEWER, STORMWATER FORCE MAIN, OR PIPELINE CONVEYING RECLAIMED WATER REGULATED UNDER PART III OF CHAPTER 62-610, F.A.C.; AT LEAST THREE FEET, AND PREFERABLY TEN FEET, FROM ANY EXISTING OR PROPOSED VACUUM-TYPE SANITARY SEWER; AT LEAST SIX FEET, AND PREFERABLY TEN FEET, FROM ANY EXISTING OR PROPOSED GRAVITY- OR PRESSURE-TYPE SANITARY SEWER, WASTEWATER FORCE MAIN, OR PIPELINE CONVEYING RECLAIMED WATER NOT REGULATED UNDER PART III OF CHAPTER 62-610, F.A.C.; AND AT LEAST TEN FEET FROM ANY EXISTING OR PROPOSED "ONSITE SEWAGE TREATMENT AND DISPOSAL SYSTEM" AS DEFINED IN SECTION 381.0065(2), F.S., AND RULE 64E-6.002, F.A.C.

19. WATER MAINS SHALL BE ABOVE THE SEWERS WHENEVER THEY CROSS ANY SANITARY SEWER, STORM SEWER, SEWAGE FORCE MAIN OR REUSE FORCE MAIN. A VERTICAL SEPARATION OF AT LEAST 18 INCHES SHALL BE MAINTAINED BETWEEN THE TOP OF THE SEWER AND THE BOTTOM OF THE WATER MAIN. SEWERS SHALL HAVE ONE FULL LENGTH OF DUCTILE IRON PIPE CENTERED AT THE POINT OF CROSSING SO THAT THE JOINTS WILL BE EQUIDISTANT AND AS FAR AS POSSIBLE FROM THE WATER MAIN.

20. ALL PAVING, STABILIZED EARTH, DRIVEWAYS, CURBS, SIDEWALKS, FENCES, SOD, LANDSCAPING, IRRIGATION SYSTEMS, CULVERTS, ETC. DISTURBED BY THE CONTRACTOR'S OPERATIONS SHALL BE RESTORED TO EQUAL OR BETTER CONDITION. SOD ALL AREAS DISTURBED DURING CONSTRUCTION.

21. FITTINGS MAY BE USED FOR PIPE ALIGNMENT CHANGES RATHER THAN DEFLECTING AT THE CONTRACTOR'S OPTION AND WITH NO ADDITIONAL COMPENSATION.

22. PRIOR TO BID PREPARATION, THE CONTRACTOR SHALL FAMILIARIZE HIMSELF WITH THE OVERALL SITE CONDITIONS AND PERFORM ADDITIONAL INVESTIGATIONS AS DETERMINED NECESSARY TO UNDERSTAND THE LIMIT AND DEPTH OF UNSUITABLE MATERIALS, IF ANY, ADEQUACY OF EXISTING MATERIALS AS FILL, DEWATERING REQUIREMENTS, CLEAN FILL REQUIRED FROM OFF SITE, AND MATERIALS TO BE DISPOSED OF OFF SITE, ALL OF WHICH WILL AFFECT HIS PRICING, ANY DELAY, INCONVENIENCE, OR EXPENSE CAUSED TO THE CONTRACTOR DUE TO INADEQUATE INVESTIGATION OF EXISTING CONDITIONS SHALL BE INCIDENTAL TO THE CONTRACT, AND NO EXTRA COMPENSATION WILL BE ALLOWED. THE MATERIALS ANTICIPATED TO BE ENCOUNTERED DURING CONSTRUCTION MAY REQUIRE DRYING PRIOR TO USE AS BACKFILL, AND THE CONTRACTOR MAY HAVE TO BRING IN MATERIALS AT NO ADDITIONAL COST TO THE OWNER, FROM OFF SITE TO MEET THE REQUIREMENTS FOR COMPACTION AND PROPER FILL.

23. ALL DRAINAGE AREAS THAT ARE CROSSED BY PIPELINES SHALL BE LEFT OPEN AT ALL TIMES EXCEPT FOR SHORT PERIODS AS MAY BE NECESSARY DURING ACTUAL CONSTRUCTION HOURS.

24. THE CONTRACTOR SHALL OBTAIN THE SERVICES OF A REGISTERED PROFESSIONAL LAND SURVEYOR FOR LAYOUT OF ALL WORK AND FOR RESTORING ALL MONUMENTS AND PROPERTY CORNERS DISTURBED DURING CONSTRUCTION. PROOF OF REGISTRATION SHALL BE SUBMITTED TO ENGINEER.

25. ALL WATER DISTRIBUTION SYSTEMS SHALL BE FLUSHED CLEAN OF ALL DELETERIOUS MATERIAL PRIOR TO ANY TESTING. FULL DIAMETER FLUSHING IS REQUIRED. ALL POTABLE WATER AND RAW WATER MAINS EITHER INSTALLED OR DISTURBED DURING CONSTRUCTION SHALL BE DISINFECTED IN ACCORDANCE WITH AWWA C-651 (SUBSECTION 4.8 AND SECTION 9) AND RULE 62-555.345, F.A.C. SUCH WATER MAINS SHALL THEN BE BACTERIOLOGICALLY TESTED IN ACCORDANCE WITH STATE AND LOCAL REQUIREMENTS. A REPRESENTATIVE FROM THE COUNTY MUST BE PRESENT DURING THE TAKING OF ALL WATER SAMPLES. LOCATIONS OF BACTERIOLOGICAL TESTING SHALL BE LOCATED VIA GPS AND PROVIDED ON THE AS-BUILT SURVEY.

26. EACH BACTERIOLOGICAL SAMPLE POINT SHALL BE INSTALLED PER THE PERMIT AND EQUIPPED WITH A CORPORATION STOP, DISCHARGE PIPE, AND ABOVE-GRADE VALVE. FOLLOWING PASSAGE OF BACTERIOLOGICAL TESTING, THE CONTRACTOR SHALL REMOVE THE CORPORATION STOP AND PLUG THE CONNECTION.

27. ALL DUCTILE IRON PIPE AND FITTINGS SHALL BE ENCASED IN POLYETHYLENE TWENTY PER AWWA C501/ANSI A21.5.

28. ALL EXISTING POTABLE WATER AND RAW WATER MAINS SHALL REMAIN OPERATIONAL AND SHALL NOT BE TAKEN OUT OF SERVICE DURING CONSTRUCTION WITHOUT APPROVAL FROM COUNTY.

29. ALL MATERIALS, COATINGS AND CHEMICALS THAT CONTACT RAW WATER AND/OR DRINKING WATER SHALL BE IN CONFORMANCE WITH ANSI/NSF STANDARD 61.

30. FLORIDA LAW (F.S. 553.851) REQUIRES THAT PERSONS MAKING EXCAVATIONS IN PUBLIC AND PRIVATE STREETS, ALLEYS, RIGHT-OF-WAYS OR UTILITY EASEMENTS MUST FIRST OBTAIN INFORMATION ON LOCATION OF UNDERGROUND GAS PIPELINES A MINIMUM OF TWO (2) WORKING DAYS PRIOR TO EXCAVATING. CALL SUNSHINE STATE ONE CALL CENTER 1-800-432-4770.

31. IT IS THE CONTRACTOR'S RESPONSIBILITY TO DETERMINE THE EXACT LOCATION, DEPTH, AND CHARACTER OF ALL UTILITIES PRIOR TO CONSTRUCTION. THE CONTRACTOR SHALL NOTIFY RESPECTIVE UTILITY OWNERS AND FIELD VERIFY LOCATIONS AND ELEVATIONS OF UTILITIES AT LEAST 48 HOURS IN ADVANCE OF WORK. CONTRACTOR SHALL BE RESPONSIBLE FOR DAMAGE CAUSED BY HIS/HER OPERATIONS.

32. THE CONTRACTOR SHALL PRESERVE AND MAINTAIN ALL EXISTING UTILITIES WITHIN THE CONSTRUCTION AREA.

33. LOCATIONS AND ELEVATIONS OF EXISTING UTILITIES EXPOSED DURING CONSTRUCTION SHALL BE ACCURATELY RECORDED ON THE CONSTRUCTION DRAWINGS. THE OWNER SHALL BE IMMEDIATELY NOTIFIED OF ANY CONFLICTS WITH PROPOSED CONSTRUCTION.

34. THE CONTRACTOR SHALL PROVIDE SUPPORT FOR EXISTING POWER POLES, TELEPHONE POLES AND STRUCTURES DURING CONSTRUCTION.

35. EXISTING UTILITIES AS SHOWN ARE APPROXIMATE LOCATIONS. SANITARY SEWER MAINS STORM DRAINS, WATER VALVES, CABLES, MANHOLES, WATER AND SEWER SERVICE LATERALS AND LIFT STATION LOCATIONS WERE OBTAINED FROM SURVEY INFORMATION AND RECORD DRAWINGS. ACTUAL LOCATIONS OF EXISTING WATER MAINS, FORCE MAINS, CABLES, WATER AND SEWER SERVICE LATERALS HAVE NOT BEEN FIELD VERIFIED. THE EXISTING UTILITIES SHOWN SHALL NOT BE CONSTRUED AS BEING ALL INCLUSIVE OF UTILITIES IN THE AREA. ANY INTERRUPTION OF SERVICE SHALL BE COORDINATED WITH THE OWNER OF THE UTILITY.

36. THE CONTRACTOR SHALL LOCATE PROPOSED TIE IN LOCATIONS TO VERIFY ACTUAL LOCATION, SIZE, ELEVATION AND MATERIAL PRIOR TO ORDERING NEW MATERIAL. WHERE A CONNECTION IS MADE IN THE FIELD TO AN EXISTING PIPE, THE CONTRACTOR WILL EXCAVATE THE AREA TO VERIFY THE TYPE OF PIPE AND PIPE SIZE, AND OBTAIN THE OWNER'S APPROVAL OF THE PROPOSED METHOD OF CONNECTION; PRIOR TO ORDERING AND INSTALLING MATERIALS. WHERE CONNECTING TO EXISTING UTILITIES CONTRACTOR SHALL RESTRAIN EXISTING PIPELINE TO PREVENT MOVEMENT OF THE INSTALLATION WHEN TEST PRESSURE IS APPLIED.

37. THE CONTRACTOR SHALL TAKE ALL MEASURES NECESSARY TO CONTROL TURBIDITY INCLUDING, BUT NOT LIMITED TO, THE INSTALLATION OF TURBIDITY BARRIERS AT ALL LOCATIONS WHERE THE POSSIBILITY OF INFERRING SUSPENDED SOLIDS INTO THE RECEIVING WATER BODY, EXISTS DUE TO THE PROPOSED WORK. TURBIDITY BARRIERS MUST BE MAINTAINED AT ALL LOCATIONS UNTIL CONSTRUCTION IS COMPLETED AND DISTURBED SOIL AREAS ARE STABILIZED. THE CONTRACTOR SHALL ALSO BE RESPONSIBLE FOR REMOVING THE BARRIERS. AT NO TIME SHALL THERE BE ANY OFF-SITE DISCHARGE WHICH VIOLATES THE WATER QUALITY STANDARDS IN CHAPTERS 62-302 AND 62-4, FLORIDA ADMINISTRATIVE CODE.

38. THE CONTRACTOR SHALL MAINTAIN NORMAL TRANSPORT VEHICLE ACCESS TO WSF FACILITIES AT ALL TIMES.

39. EQUIPMENT PAD DIMENSIONS AND EQUIPMENT ANCHOR BOLT REQUIREMENTS ARE DEPENDENT UPON EQUIPMENT SELECTED. DIMENSIONS INDICATED ON THE DRAWINGS SHALL BE VERIFIED WITH MANUFACTURER FOR ACTUAL SIZE OF EQUIPMENT SELECTED.

40. COORDINATE WITH OTHER TRADES THE LOCATION OF SLEEVES AND WALL PIPES THROUGH WALLS, SLABS AND CEILINGS. REFER TO MECHANICAL, ELECTRICAL, STRUCTURAL, AND PROCESS DRAWINGS FOR SPECIFIC REQUIREMENTS.

41. ALL EXPANSION JOINTS, COUPLINGS AND FLANGED COUPLING ADAPTERS SHALL BE PROVIDED WITH THRUST TIES, BLOCKS, OR ANCHORS, UNLESS OTHERWISE NOTED. THRUST PROTECTION SHALL BE ADEQUATE FOR TEST PRESSURES SPECIFIED.

42. ALL PIPING JOINTS TO BE RESTRAINED.

43. THE CONTRACTOR SHALL PROVIDE A SIGN ABOVE ALL HOSE BIBBS WHICH SHALL STATE EITHER "POTABLE" OR "NON-POTABLE, DO NOT DRINK". THE SIGN SHALL BE MADE OF LAMINATED PLASTIC WITH A BLACK FACE AND WHITE LETTERS APPROXIMATELY 3/4-INCH HIGH. ATTACH A SIGN TO STRUCTURE OR HANDRAIL WITH STAINLESS STEEL HARDWARE.

44. WHERE BURIED PIPE 4 INCHES AND LARGER CROSS, A MINIMUM VERTICAL CLEARANCE BETWEEN PIPES OF 12 INCHES SHALL BE MAINTAINED WHERE POSSIBLE. IF A CLEARANCE BETWEEN PIPES OF 12 INCHES CANNOT BE MAINTAINED, A CONCRETE SADDLE WILL BE INSTALLED BETWEEN THE PIPES.

45. ALL PIPING UNDER STRUCTURES SHALL BE CONCRETE ENCASED.

46. IN THE EVENT THAT THE POTABLE WATER SYSTEM IS CONTAMINATED (I.E. WATER DOES NOT MEET FEDERAL AND STATE REQUIREMENTS) DUE TO THE CONSTRUCTION ACTIVITIES, THE CONTRACTOR SHALL BE RESPONSIBLE, UNDER THE DIRECTION OF THE OWNER, OR THE STATE AND LOCAL REGULATORY AGENCY FOR CORRECTING ANY SUCH CONTAMINATION PROBLEM INCLUDING DISINFECTION, TESTING AND OTHER CORRECTIVE ACTION.

47. ALL PIPE TO BE COLOR-CODED AS SPECIFIED IN SECTION 09905.

48. NOTIFY COUNTY RPR FOR SCHEDULING SHUT DOWNS AND OUTAGES, TRAINING, SPARE PARTS TRANSFERS OR ANY OTHER INTERACTION WITH THE USE OF A C.A.R. CALL SCADA AT (407)-254-9509 FOR SHUT-DOWNS AND ACCESS TO THE FACILITY.

49. CONTRACTOR SHALL BE RESONSIBLE FOR REMOVING ALL EXCESS FILL FROM THE SITE AT NO ADDITIONAL COST TO THE OWNER.

50. ALL CONNECTIONS TO STEEL PIPE SHALL BE WELDED.

51. ALL BURIED VALVES SHALL BE MINIMUM 2-INCHES WITH 2-INCH NUT AT VALVE BOX ASSEMBLY.

52. CONSTRUCTION AREA SHALL BE CLEANED UP DAILY. ALL EXCAVATIONS SHALL BE BACKFILLED BY THE END OF THE DAY, OR WITH PERMISSION FROM THE RESIDENT PROJECT REPRESENTATIVE, MAY BE LEFT OPEN WITH PROPER SAFETY PRECAUTIONS. CONTRACTOR SHALL HANDLE ALL SPILLS, DRAINING PIPES OR TIE-IN CONNECTIONS. CONTRACTOR SHALL HAVE TANKER TRUCKS AND LINE EXCAVATIONS WITH POLY LINER IN ORDER TO HANDLE SPILLS AND TO CAPTURE AND DISPOSE OF FLUIDS ENCOUNTERED.

FLOW STREAM IDENTIFICATION AND PIPING SCHEDULE

ABBREVIATION	FLOW STREAM ID	PIPE MATERIAL	PIPE MAT'L ABBREV	SPEC NO	PIPE LINING	DESIGN PRESSURE (PSI)	TEST PEAK (PSI)
DR	DRAIN	POLYVINYL CHLORIDE	PVC	15064	N/A	GRAVITY	15 FT WCH
HFA	HYDROFLUOSILICIC ACID	POLYVINYL CHLORIDE	PVC	15070	N/A	50	100
NaOCl	SODIUM HYPOCHLORITE	POLYVINYL CHLORIDE	PVC	15070	N/A	50	100
SVW	PLANT SERVICE WATER	POLYVINYL CHLORIDE	PVC	15064 AND 15070	N/A	70	150
RW	RAW WATER	DUCTILE IRON	DIP	15062	CEMENT MORTAR	25	100
SA	SAMPLE LINE	POLYVINYL CHLORIDE	PVC	15070	N/A	70	150
WM	WATER MAIN	DUCTILE IRON	DIP	15062	CEMENT MORTAR	70	150
FM	WASTE WATER FORCE MAIN	POLYVINYL CHLORIDE	PVC	15064 AND 15070	N/A	70	150
PW	POTABLE WATER	DUCTILE IRON	DIP	15062	CEMENT MORTAR	70	150

DRAWING INDEX

Sheet List Table

Sheet Number	Sheet Title
GENERAL	
--	COVER
G001	GENERAL NOTES AND DRAWING INDEX
G002	LEGEND AND ABBREVIATIONS
G003	EXISTING PROCESS FLOW DIAGRAM
G004	PROPOSED PROCESS FLOW DIAGRAM
CIVIL	
V101	EXISTING CONDITIONS AND DEMOLITION PLAN
V102	SITE DRAINAGE BASIN MAP
C100	OVERALL SITE KEY PLAN
C101	SITE GEOMETRY PLAN
C102	SITE GEOMETRY PLAN
C201	PAVING, GRADING AND DRAINAGE PLAN
C202	PAVING, GRADING AND DRAINAGE PLAN
C301	UTILITY PLAN
C302	UTILITY PLAN
C303	PLAN & PROFILE
C304	PLAN & PROFILE
C501	CIVIL DETAILS
C502	CIVIL DETAILS
C503	CIVIL DETAILS
C504	CIVIL DETAILS
STRUCTURAL	
S001	GENERAL NOTES & ABBREVIATIONS LEGEND AND SYMBOLS
S101	WELLHOUSE PLANS, SECTIONS, ELEVATIONS AND DETAILS
S501	STRUCTURAL DETAILS
ARCHITECTURAL	
A000	ARCHITECTURAL GENERAL INFORMATION
A101	WELL HOUSE FLOOR PLAN, ROOF PLAN, ELEVATIONS AND SECTIONS
A501	DOOR DETAILS
PROCESS	
D101	EXISTING WELLS NO. 4 & 7 PLAN AND SECTION
D102	PROPOSED WELL NO. 11 PLAN AND SECTION
D103	PROPOSED 2 MG GROUND STORAGE TANK PLAN AND ELEVATION
D104	PROPOSED 2 MG GROUND STORAGE TANK LOWER PLAN AND SECTIONS
D501	PROPOSED 2 MG GROUND STORAGE TANK DETAILS
D502	PROPOSED 2 MG GROUND STORAGE TANK DETAILS
D503	MISCELLANEOUS DETAILS
MECHANICAL	
M001	HVAC SCHEDULES & DETAILS
M100	PROPOSED WELLHOUSE HVAC FLOOR PLAN

Sheet List Table

Sheet No.	Sheet Title
ELECTRICAL	
E001	ELECTRICAL LEGEND AND SYMBOLS
E002	ELECTRICAL NOTES
E003	SWG-201 ONE LINE DIAGRAM
E004	PSC-201 ONE LINE DIAGRAM
E005	ELEVATION DIAGRAMS
E006	SCHEMATIC DIAGRAMS
E007	FIBER OPTIC COMMUNICATION RISER
E008	RISER DIAGRAMS AND SCHEDULES
E009	YARD CONDUITS SCHEDULE
E101	ELECTRICAL SITE PLAN - KEY PLAN
E102	ELECTRICAL SITE PLAN - SHEET 1
E103	ELECTRICAL SITE PLAN - SHEET 2
E104	WELL HOUSE NO.11 - ELECTRICAL PLAN
E105	EXISTING WELL 4 AND 7 ELECTRICAL PLAN
E106	EXISTING WELL 4 AND 7 PHOTOS AND STARTER SCHEMATIC
E201	GROUND STORAGE TANK NO.3 ELECTRICAL PLAN
E202	HIGH SERVICE PUMP BUILDING - ELECTRICAL MODIFICATIONS
E501	ELECTRICAL DETAILS - SHEET 1
E502	ELECTRICAL DETAILS - SHEET 2
E503	ELECTRICAL DETAILS - SHEET 3
INSTRUMENTATION	
I001	INSTRUMENTATION LEGEND AND SYMBOLS
I002	P&ID - WELLS
I003	EXISTING WELL 4 AND 7 P&ID DIAGRAM
I004	P&ID - GROUND STORAGE TANKS
I005	MODIFIED COMMUNICATION BLOCK DIAGRAM
I501	INSTRUMENTATION DETAILS - SHEET 1

TETRA TECH
www.tetratech.com
201 EAST PINE STREET, SUITE 1000
ORLANDO, FLORIDA 32801
PHONE: (407) 839-3955 FAX: (407) 839-3790

BID SET

MARK	DATE	DESCRIPTION	BY

Client: ORANGE COUNTY UTILITIES
Proj. Loc.: ORANGE COUNTY, FL

WESTERN REGIONAL WATER SUPPLY FACILITY
IMPROVEMENTS PHASE 3B

GENERAL NOTES AND DRAWING INDEX

Project No.:	200-158870-16001
Designed By:	JCB
Drawn By:	JTE
Checked By:	JPT

G001

Copyright: Tetra Tech

Wednesday, August 22, 2018 9:58:03 AM DRAWING: \\TTS181FS1\Projects\ER\158870\200-158870-16001\CAD\SheetFiles\G001 - GEN NOTES & DWG INDEX .DWG LAYOUT: G001 USER NAME: EVANS, JON

LIST OF STANDARD ABBREVIATIONS

A

AAP	ALARM ANNUNCIATOR PANEL
AARV	AUTOMATIC AIR RELEASE VALVE
AAV	AUTOMATIC AIR VENT
AB	ANCHOR BOLT
ABAN	ABANDON(ED)
ABRSV	ABRASIVE
ABS	ACRYLONITRILE BUTADIENE STYRENE
ABV	ABOVE
AC	ALTERNATING CURRENT
ACCMP	ASPHALT-COATED CORRUGATED METAL PIPE
ACP	ASBESTOS CEMENT PIPE
ADDM	ADDENDUM
ADH	ADHESIVE
AFF	ABOVE FINISHED FLOOR
AFG	ABOVE FINISHED GRADE
AFS	ABOVE FINISHED SLAB
AHD	AHEAD
AL	ALUMINUM
ALT	ALTERNATE
AMP	AMPERE
AMT	AMOUNT
APRX	APPROXIMATE(LY)
ARCH	ARCHITECT(URAL)
AS	ALUM SOLUTION
ASPH	ASPHALT
ASSY	ASSEMBLY
AVE	AVENUE
A/C	AIR CONDITIONING
A/VV	AIR/VACUUM AIR VALVE

B

BAF	BAFFLE
BCV	BALL CHECK VALVE
BF	BLIND FLANGE
BFV	BUTTERFLY VALVE
BHP	BRAKE HORSEPOWER
BI	BLACK IRON
BITUM	BITUMINOUS OR BITUMASTIC
B/L	BASELINE
BLDG	BUILDING
BLK	BLOCK
BM	BENCH MARK
BOC	BACK OF CURB
BOT	BOTTOM
BP	BASE PLATE
BRG	BEARING
BSP	BLACK STEEL PIPE
BV	BALL VALVE
BW	BOTH WAYS
BWW	BACKWASH WATER

C

CAP	CAPACITY
CA	COMPRESSED AIR
CAV	COMBINATION AIR VALVE
CB	CATCH BASIN
CCC	CHLORINE CONTACT CHAMBER
CE	CHLORINATED EFFLUENT
CFM	CUBIC FEET PER MINUTE
CFS	CUBIC FEET PER SECOND
CV	CHECK VALVE
CI	CAST IRON
CIP	CAST IRON PIPE
CISP	CAST IRON SOIL PIPE
CJ	CONSTRUCTION JOINT
CKT	CIRCUIT
C/L	CENTER LINE
CL2	CHLORINE GAS
CLF	CHAIN LINK FENCE
CLR	CLEAR OR CLEARANCE
CLVT	CULVERT
CMP	CORRUGATED METAL PIPE
CMPA	CORRUGATED METAL PIPE ARCH
CMU	CONCRETE MASONRY UNIT
CND	CONDUIT
CNR	CORNER
CO	CLEAN OUT
CO2	CARBON DIOXIDE
COAG	COAGULANT
COL	COLUMN
COM	COMMON
CONC	CONCRETE
CONN	CONNECTION
CONSTR	CONSTRUCT(ION)
CONT	CONTINUOUS
CONTR	CONTRACT(OR)
COORD	COORDINATE
CO	COMPANY
CP	CONCRETE PIPE
CPA	CONCRETE PIPE ARCH
CPLG	COUPLING
CPVC	CHLORINATED POLYVINYL CHLORIDE
CR	CONCENTRIC REDUCER
CS	CHLORINE SOLUTION
CSG	CASING
CTV	CABLE TELEVISION
CY	CUBIC YARD
CYL	CYLINDER
C&G	CURB AND GUTTER
C/C	CENTER TO CENTER

D

DAT	DATUM
DBL	DOUBLE
DC	DIRECT CURRENT
DEMO	DEMOLITION
DEPT	DEPARTMENT
DESC	DESCRIPTION
DET	DETAIL
DF	DIESEL FUEL
DI	DUCTILE IRON
DIA	DIAMETER
DIFF	DIFFUSER
DIM	DIMENSION
DIP	DUCTILE IRON PIPE
DISCH	DISCHARGE
DIR	DIRECTION
DMH	DROP MANHOLE
DN	DOWN
DR	DRAIN
DV	DIAPHRAGM VALVE
DW	DRIVEWAY
DWG	DRAWING
DWV	DRAIN, WASTE, AND VENT

E

E	EAST
EA	EACH
ECC	ECCENTRIC
EF	EACH FACE
EFF	EFFLUENT
E/L	EASEMENT LINE
EL	ELEVATION
ELAST	ELASTOMERIC
ELEC	ELECTRICAL
EMER	EMERGENCY
EMC	ENCASE(MENT)
ENGR	ENGINEER
EP	EDGE OF PAVEMENT
EPDM	ETHYLENE PROPYLENE DIENE MONOMER
EPRF	EXPLOSION PROOF
EQUIP	EQUIPMENT
ER	ECCENTRIC REDUCER
ESTM	EASEMENT
EST	ESTIMATE(D)
EW	EACH WAY
EXC	EXCAVATE
EXP	EXPANSION
EXST	EXISTING
EXST GR	EXISTING GRADE
EXT	EXTERIOR
EXTN	EXTENSION

F

FAB	FABRICATE(D)
FCA	FLANGED COUPLING ADAPTER
FB	FLAT BAR
FCV	FLOW-CONTROL VALVE
FD	FLOOR DRAIN
FDN	FOUNDATION
FE	FILTER(ED) EFFLUENT
FHY	FIRE HYDRANT
FIG	FIGURE
FIN	FINISH(ED)
FIN FLR	FINISH FLOOR
FIN GR	FINISH GRADE
FL	FLUORIDE
FLG	FLANGE(D)
FLL	FLOW LINE
FLTR	FILTER
FM	FORCE MAIN
FPM	FEET PER MINUTE
FPS	FEET PER SECOND
FRP	FIBERGLASS REINFORCED PLASTIC
FT	FOOT OR FEET
FUT	FUTURE
FV	FOOT VALVE
FW	FINISHED WATER
FWP	FACTORY WIRED PANEL
F/F	FACE TO FACE

G

GA	GAUGE
GAL	GALLON(S)
GALV	GALVANIZED
GIP	GALVANIZED IRON PIPE
GJ	GROOVE JOINT
GND	GROUND
GPD	GALLONS PER DAY
GPH	GALLONS PER HOUR
GPM	GALLONS PER MINUTE
GPS	GALLONS PER SECOND
GR	GRADE
GRTG	GRATING
GS	GALVANIZED STEEL
GSP	GALVANIZED STEEL PIPE
GSR	GROUND STORAGE RESERVOIR
GST	GROUND STORAGE TANK
GT	GROUT
GV	GATE VALVE

H

HB	HOSE BIBB
HD	HEAVY-DUTY
HDPE	HIGH-DENSITY POLYETHYLENE
HDR	HYDRAULIC
HFA	HYDROFLUOSILICIC ACID
HGR	HANGER
HGT	HEIGHT
HNDRL	HAND RAIL
HOA	HAND-OFF-AUTO
HORIZ	HORIZONTAL
HP	HORSEPOWER
HPA	HIGH PRESSURE AIR
HR	HOUR
HVAC	HEATING, VENTILATION, AND AIR CONDITIONING
HWL	HIGH WATER LEVEL
HWY	HIGHWAY
HZ	HERTZ

I

ID	INSIDE DIAMETER
IN	INCH(ES)
INF	INFLUENT
INT	INTERSECTION
INTR	INTERIOR
INV	INVERT
IP	IRON PIPE
IPS	INTERNATIONAL PIPE STANDARD
IR	INTERNAL RECYCLE
IW	IRRIGATION WATER

J

JB	JUNCTION BOX
JT	JOINT

K

K	KIP (1,000 LB)
KPL	KICK PLATE
KV	KILOVOLT
KVA	KILOVOLT-AMPERE
KW	KILOWATT
KWH	KILOWATT-HOUR

L

L	LEFT
LAB	LABORATORY
LAM	LAMINATE OR LAMINATION
LATL	LATERAL
LAV	LAVATORY
LEN	LENGTH
LB	POUND(S)
LF	LINEAR FEET
LP	LIGHT POLE
LS	LIME SLURRY
LSS	LIME STABILIZED SLUDGE
LVR	LOUVER
LWL	LOW WATER LEVEL

M

M	METER
MAINT	MAINTAIN OR MAINTENANCE
MAN	MANUAL(LY)
MAS	MASONRY
MATL	MATERIAL
MAX	MAXIMUM
MCC	MOTOR CONTROL CENTER
ME	MITERED END
MECH	MECHANICAL
MEG	MATCH EXISTING GRADE
MFR	MANUFACTURE(R)
MG	MILLION GALLONS
MGD	MILLION GALLONS PER DAY
MH	MANHOLE
MI	MILE(S)
MIN	MINIMUM, MINUTE(S)
MISC	MISCELLANEOUS
MJ	MECHANICAL JOINT
ML	MIXED LIQUOR
MO	MASONRY OPENING
MON	MONUMENT
MPH	MILES PER HOUR
MPT	MALE PIPE THREAD
MS	MOTOR STARTER
MSP	MOTOR STARTER PANEL
MTD	MOUNTED
MV	MOTORIZED VALVE
MW	MANWAY
MWL	MEAN WATER LEVEL
MWP	MAXIMUM WORKING PRESSURE

N

N	NORTH
NaOCl	SODIUM HYPOCHLORITE
NE	NORTHEAST
NIC	NOT IN CONTRACT
NO	NUMBER
NOM	NOMINAL
NPF	NATIONAL PIPE THREAD
NPT	NATIONAL PIPE TAPER (THREAD)
NPW	NON-POTABLE WATER
NRS	NON-RISING SYSTEM
NTS	NOT TO SCALE
NW	NORTHWEST
N/A	NOT APPLICABLE

O

O2	OXYGEN
OC	ON CENTER
OD	OUTSIDE DIAMETER
ODP	OPEN DRIP PROOF
OF	OUTSIDE FACE
OH	OVER HEAD
OHW	OVER HEAD WIRE
OPP	OPPOSITE
OPT	OPTIONAL
OR	OFFICIAL RECORDS
OSY	OUTSIDE SCREW AND YOKE
O&M	OPERATION AND MAINTENANCE

P

PA	PROCESS AIR
PC	POINT OF CURVE
PCM	PERMANENT CONTROL MONUMENT
PE	PLAIN END
PG	PRESSURE GAGE
PI	POINT OF INTERSECTION
PL	PLATE
P/L	PROPERTY LINE
PNV	PINCH VALVE
POB	POINT OF BEGINNING
POJ	PUSH-ON JOINT
POL	POLYMER
PP	POWER POLE
PPD	POUNDS PER DAY
PPM	PARTS PER MILLION
PREFAB	PREFABRICATED
PRESS	PRESSURE
PRV	PRESSURE REDUCING VALVE
PRW	PROCESS WATER
PSF	POUNDS PER SQUARE FOOT
PSI	POUNDS PER SQUARE INCH
PSIA	POUNDS PER SQUARE INCH ABSOLUTE
PSIG	POUNDS PER SQUARE INCH GAGE
PT	POINT OF TANGENCY
PV	PLUG VALVE
PVC	POLYVINYL CHLORIDE
PVMT	PAVEMENT
PW	POTABLE WATER
PWR	POWER

Q

Q	FLOW
QTY	QUANTITY

R

RAD	RADIUS
RAS	RETURN ACTIVATED SLUDGE
RC	REINFORCED CONCRETE
RCB	REINFORCED CONCRETE BOX
RCP	REINFORCED CONCRETE PIPE
RCPA	REINFORCED CONCRETE PIPE ARCH
RD	ROAD
RDCR	REDUCER
REBAR	REINFORCING STEEL
REF	REFERENCE
REINF	REINFORCE(D)(ING)(MENT)
REM	REMOVE(ABLE)
REQ'D	REQUIRED
RF	RAISED FACE
RJ	RESTRAINED JOINT
RM	ROOM
RPBP	REDUCED PRESSURE BACKFLOW PREVENTER
RPM	REVOLUTIONS PER MINUTE
RR	RAILROAD
RT	RIGHT
RVT	RIVETED
RW	RAW WATER
RWW	RAW WASTEWATER
R/W	RIGHT-OF-WAY

S

S	SOUTH
SA	SAMPLE LINE
SAN	SANITARY
SCHED	SCHEDULE
SD	STORM DRAIN
SE	SOUTHEAST
SECT	SECTION
SEFF	SECONDARY EFFLUENT
SF	SQUARE FOOT OR FEET
SHT	SHEET(ED)(ING)
SIG	SIGNAL
SIM	SIMILAR
SL	SLUDGE
SLV	SLEEVE
SM	SHEET METAL
SOLN	SOLUTION
SP	SOIL PIPE, SPACE(ING)
SPEC	SPECIFICATION
SPRT	SUPPORT
SQ	SQUARE
SS	SANITARY SEWER
SSE	SUBSTANDARD EFFLUENT
SST	STAINLESS STEEL
ST	STREET
STA	STATION
STD	STANDARD
STK	STAKE
STL	STEEL
STR	STRAIGHT
STRUCT	STRUCTURAL
SURF	SURFACE
SV	SOLENOID VALVE
SVCE	SERVICE
SVW	SERVICE WATER
SW	SOUTHWEST
SWD	SIDEWATER DEPTH
SWSH	SURFACE WASH
SYM	SYMBOL
SYMM	SYMMETRICAL
S/W	SIDEWALK

T

TAN	TANGENT
TB	TOP OF BEAM
TBM	TEMPORARY BENCH MARK
TB-xx	TEST BORING-xx (e.g. TB-1)
TD	TRENCH DRAIN
TDH	TOTAL DYNAMIC HEAD
TE	TOTALLY ENCLOSED
TEFC	TOTALLY ENCLOSED FAN COOLED
TEL	TELEPHONE
TENV	TOTALLY ENCLOSED NON-VENTILATED
THD	THREAD(ED)
THK	THICK(NESS)
TLM	TELEMETRY
TOB	TOP OF BANK
TOC	TOP OF CURB
TOS	TOE OF SLOPE
TOT	TOTAL
TP	TELEPHONE POLE
TS	THICKENED SLUDGE
TV	TELEVISION
TYP	TYPICAL
T&B	TOP AND BOTTOM

U

UD	UNDERDRAIN
UG	UNDERGROUND
ULT	ULTIMATE
UN	UNION
UON	UNLESS OTHERWISE NOTED
UGE	UNDERGROUND ELECTRIC
UTC	UNDERGROUND TELEPHONE CABLE
UTIL	UTILITY

V

V	VOLT(S)
VAC	VACUUM
VAR	VARIES
VC	VERTICAL CURVE
VCP	VITRIFIED CLAY PIPE
VEL	VELOCITY
VERT	VERTICAL
VFD	VARIABLE FREQUENCY DRIVE
VOL	VOLUME

W

W	WATT, WEST
WAS	WASTE ACTIVATED SLUDGE
WCO	WALL CLEAN OUT
WF	WIDE FLANGE
WH	WALL HYDRANT
WL	WATER LINE
WM	WATER MAIN
WP	WATER PROOF(ING), WORKING POINT
WPR	WORKING PRESSURE
WS	WATER SURFACE
WSP	WELDED STEEL PIPE
WT	WEIGHT
WTP	WATER TREATMENT PLANT
WW	WASH WATER
WWF	WELDED WIRE FABRIC
WWM	WELDED WIRE MESH
WWTP	WASTEWATER TREATMENT PLANT
W/	WITH
W/O	WITHOUT

X

XFER	TRANSFER

Y

YD	YARD(S)
YH	YARD HYDRANT
YR	YEAR(S) YR

PIPING LEGEND

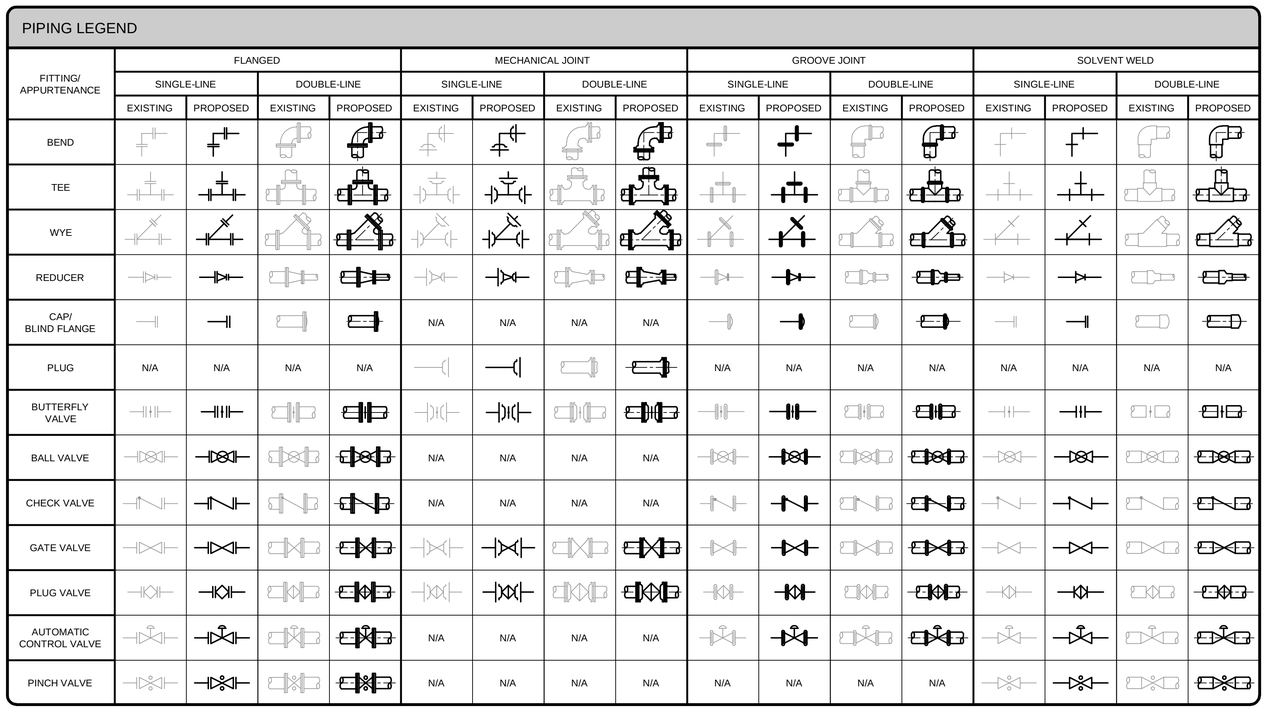

CIVIL LEGEND

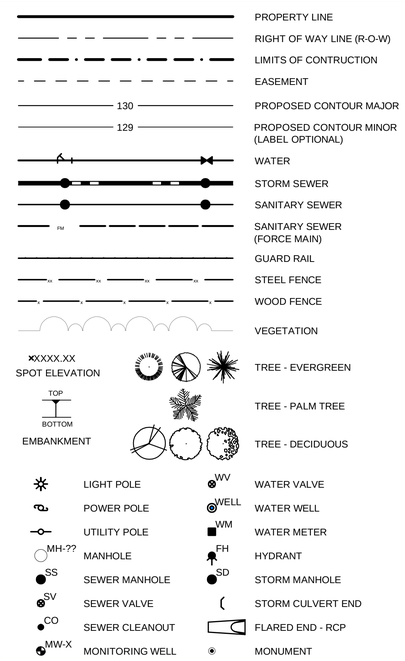

REFERENCE SYMBOLS

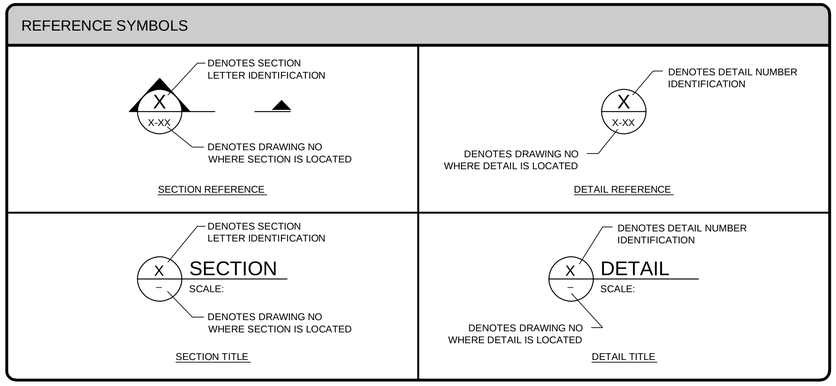

HATCHING LEGEND

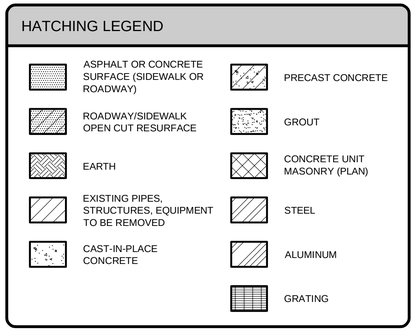

MECHANICAL/DRAFTING LEGEND

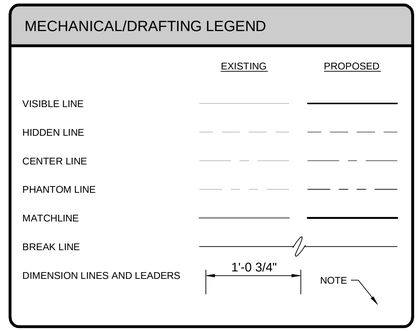

TETRA TECH
www.tetratech.com
201 EAST PINE STREET, SUITE 1000
ORLANDO, FLORIDA 32801
PHONE: (407) 839-3955 FAX: (407) 839-3790

BID SET

MARK	DATE	DESCRIPTION	BY

Client: ORANGE COUNTY UTILITIES
Proj. Loc.: ORANGE COUNTY, FL

WESTERN REGIONAL WATER SUPPLY FACILITY
IMPROVEMENTS PHASE 3B

LEGEND AND ABBREVIATIONS

Project No.:	200-158870-16001
Designed By:	JCB
Drawn By:	JTE
Checked By:	JPT

G002

Copyright: Tetra Tech

Wednesday, August 22, 2018 9:58:10 AM DRAWING: \\TTS181FS1\Projects\ER\158870\200-158870-16001\CAD\SheetFiles\G002 - LEG & ABR .DWG LAYOUT: G002 USER NAME: EVANS, JON

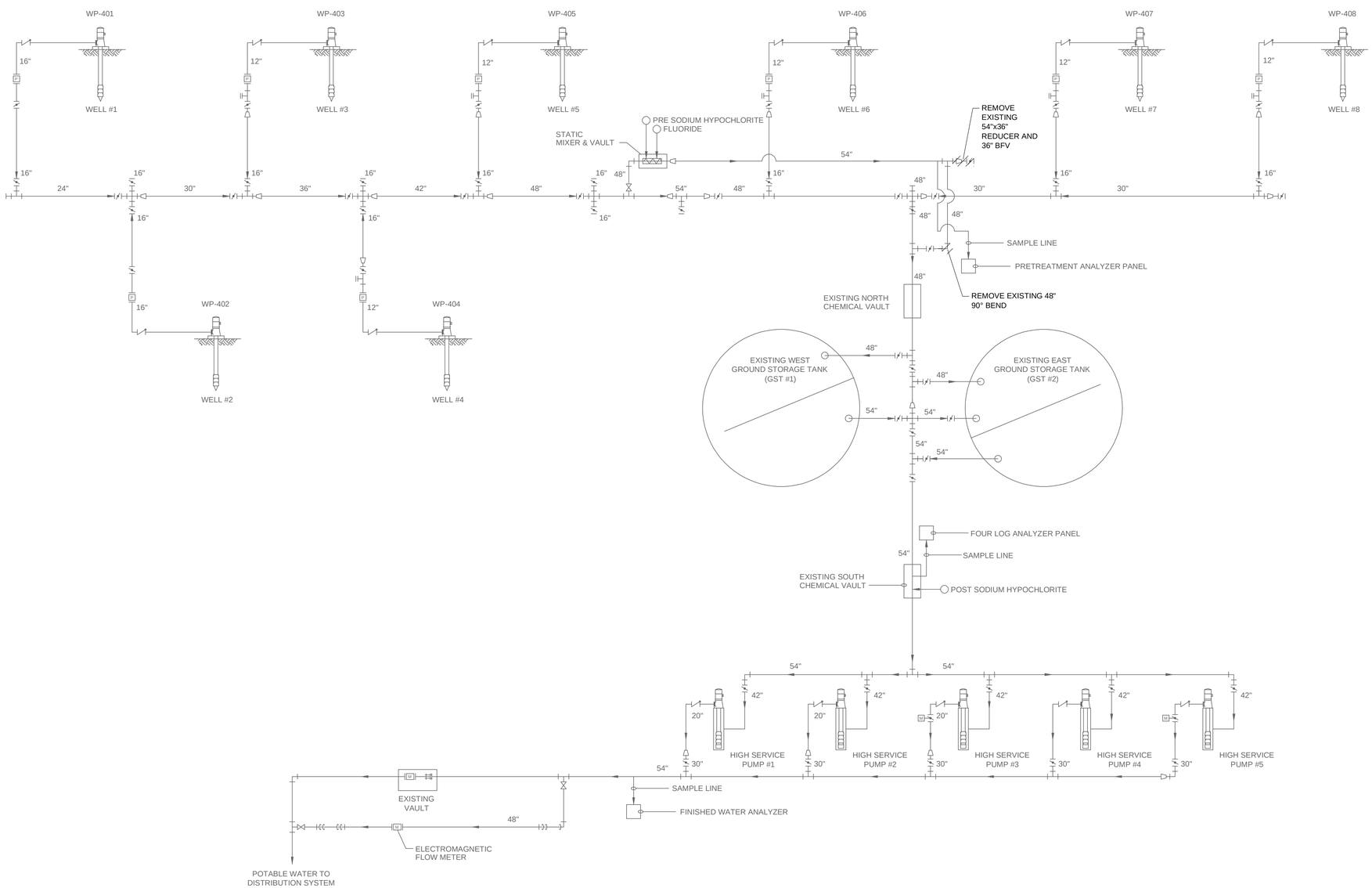

LEGEND

- EXISTING PIPING & EQUIPMENT
- TO BE REMOVED
- PROPOSED PIPING
- CHEMICAL FEED POINT
- INDICATES PROPOSED MODIFICATIONS
- BUTTERFLY VALVE
- GATE VALVE
- CHECK VALVE
- MAGNETIC FLOW METER
- PROPELLER FLOW METER
- REDUCER

TETRA TECH
www.tetratech.com
201 EAST PINE STREET, SUITE 1000
ORLANDO, FLORIDA 32801
PHONE: (407) 839-3955 FAX: (407) 839-3790

BID SET

MARK	DATE	DESCRIPTION	BY

Client: ORANGE COUNTY UTILITIES
Proj. Loc.: ORANGE COUNTY, FL

WESTERN REGIONAL WATER SUPPLY FACILITY
IMPROVEMENTS PHASE 3B

EXISTING PROCESS FLOW DIAGRAM

Project No.:	200-158870-16001
Designed By:	JCB
Drawn By:	JTE
Checked By:	JPT

G003

Copyright: Tetra Tech

Wednesday, August 22, 2018 9:58:16 AM DRAWING: \\TTS181FS1\Projects\IER\158870\200-158870-16001\CAD\SheetFiles\G003_004 - EX & PRO PROCESS FLOW DIA .DWG LAYOUT: G003 USER NAME: EVANS, JON

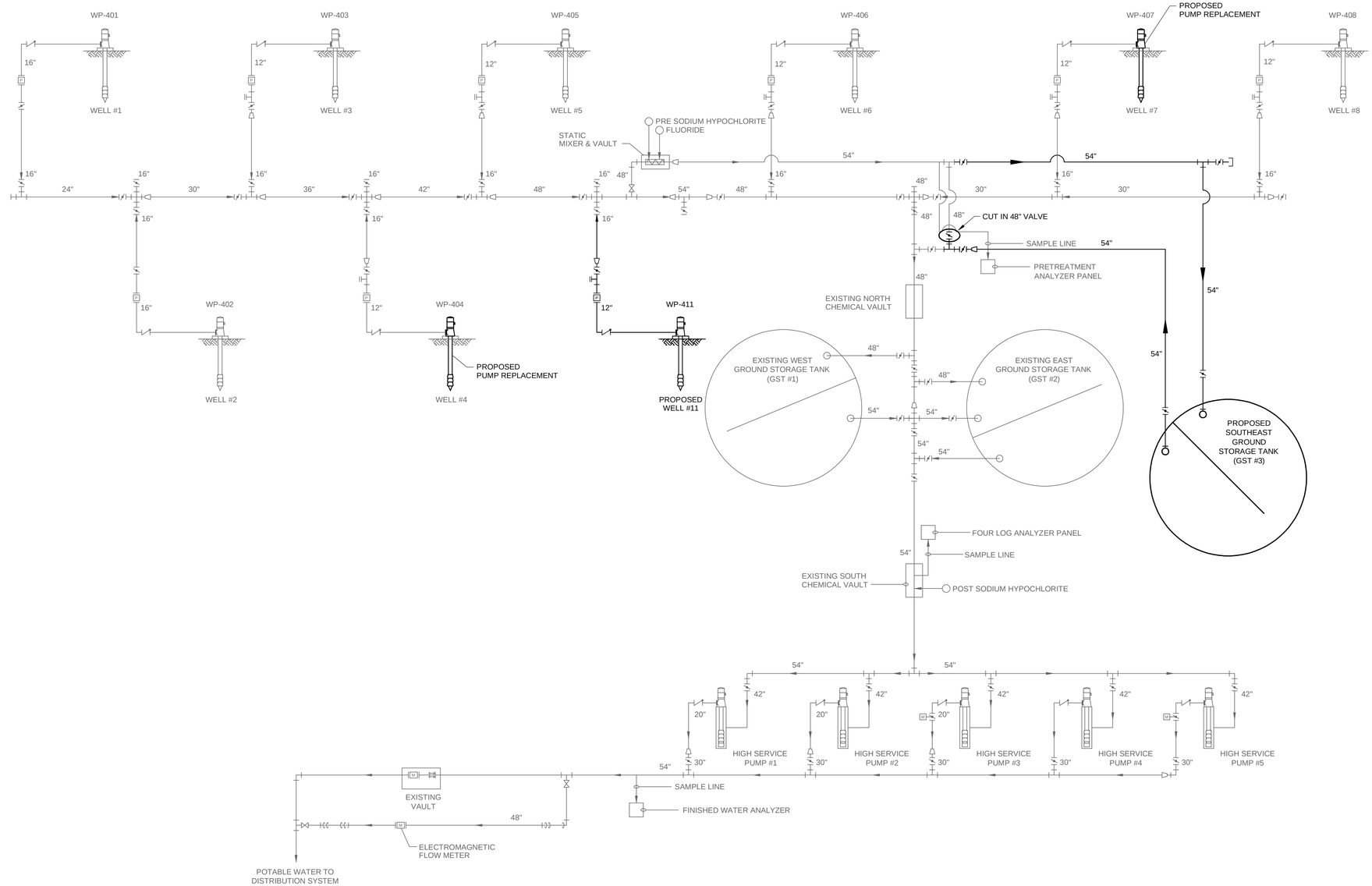

NOTES:

1. ALL VALVES AND FITTINGS SHALL BE FIELD VERIFIED.
2. ALL PROPOSED PIPING SHALL BE DISINFECTED PER SPECIFICATION SECTION 15041.

LEGEND

- EXISTING PIPING & EQUIPMENT
- PROPOSED PIPING
- CHEMICAL FEED POINT
- INDICATES PROPOSED MODIFICATIONS
- BUTTERFLY VALVE
- GATE VALVE
- CHECK VALVE
- MAGNETIC FLOW METER
- PROPELLER FLOW METER
- REDUCER

TETRA TECH
www.tetratech.com
201 EAST PINE STREET, SUITE 1000
ORLANDO, FLORIDA 32801
PHONE: (407) 839-3955 FAX: (407) 839-3790

BID SET

MARK	DATE	DESCRIPTION	BY

Client: ORANGE COUNTY UTILITIES
Proj. Loc.: ORANGE COUNTY, FL

WESTERN REGIONAL WATER SUPPLY FACILITY
IMPROVEMENTS PHASE 3B

PROPOSED PROCESSS FLOW DIAGRAM

Project No.:	200-158870-16001
Designed By:	JCB
Drawn By:	JTE
Checked By:	JPT

G004

Copyright: Tetra Tech

Wednesday, August 22, 2018 9:58:16 AM DRAWING: \\TTS181FS1\Projects\IER\158870\200-158870-16001\CAD\SheetFiles\G003_004 - EX & PRO PROCESS FLOW DIA DWG LAYOUT: G004 USER NAME: EVANS, JON

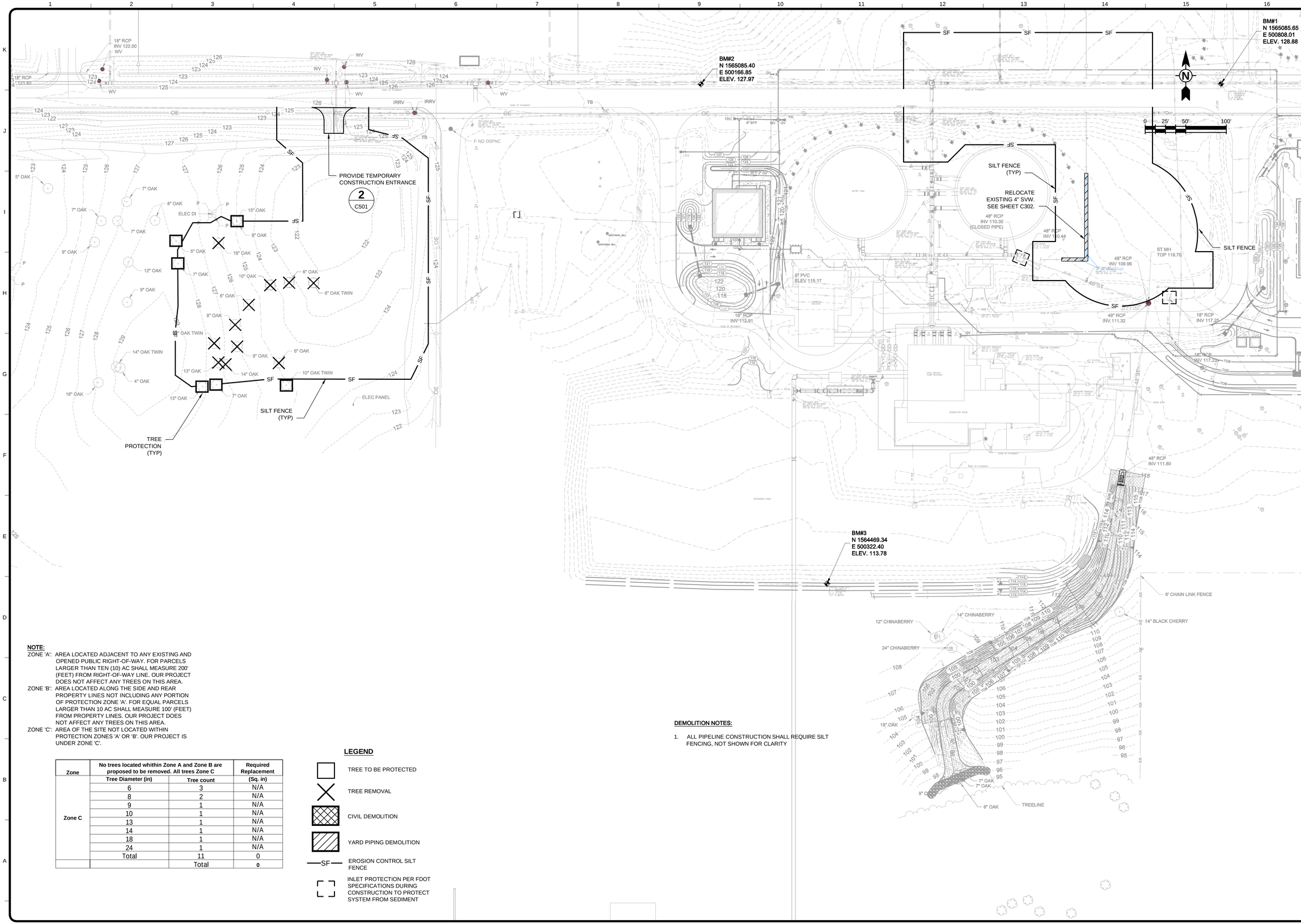

NOTE:

ZONE 'A': AREA LOCATED ADJACENT TO ANY EXISTING AND OPENED PUBLIC RIGHT-OF-WAY. FOR PARCELS LARGER THAN TEN (10) AC SHALL MEASURE 200' (FEET) FROM RIGHT-OF-WAY LINE. OUR PROJECT DOES NOT AFFECT ANY TREES ON THIS AREA.

ZONE 'B': AREA LOCATED ALONG THE SIDE AND REAR PROPERTY LINES NOT INCLUDING ANY PORTION OF PROTECTION ZONE 'A'. FOR EQUAL PARCELS LARGER THAN 10 AC SHALL MEASURE 100' (FEET) FROM PROPERTY LINES. OUR PROJECT DOES NOT AFFECT ANY TREES ON THIS AREA.

ZONE 'C': AREA OF THE SITE NOT LOCATED WITHIN PROTECTION ZONES 'A' OR 'B'. OUR PROJECT IS UNDER ZONE 'C'.

Zone	No trees located whithin Zone A and Zone B are proposed to be removed. All trees Zone C		Required Replacement
	Tree Diameter (in)	Tree count	(Sq. in)
Zone C	6	3	N/A
	8	2	N/A
	9	1	N/A
	10	1	N/A
	13	1	N/A
	14	1	N/A
	18	1	N/A
	24	1	N/A
	Total	11	0
		Total	0

LEGEND

- TREE TO BE PROTECTED
- TREE REMOVAL
- CIVIL DEMOLITION
- YARD PIPING DEMOLITION
- —SF— EROSION CONTROL SILT FENCE
- INLET PROTECTION PER FDOT SPECIFICATIONS DURING CONSTRUCTION TO PROTECT SYSTEM FROM SEDIMENT

DEMOLITION NOTES:

1. ALL PIPELINE CONSTRUCTION SHALL REQUIRE SILT FENCING, NOT SHOWN FOR CLARITY

TETRA TECH
www.tetratech.com
201 EAST PINE STREET, SUITE 1000
ORLANDO, FLORIDA 32801
PHONE: (407) 839-3955 FAX: (407) 839-3790

BID SET

MARK	DATE	DESCRIPTION	BY

Client: ORANGE COUNTY UTILITIES
Proj. Loc.: ORANGE COUNTY, FL

WESTERN REGIONAL WATER SUPPLY FACILITY
IMPROVEMENTS PHASE 3B

EXISTING CONDITIONS AND DEMOLITION PLAN

Project No.: 200-158870-16001
Designed By:
Drawn By:
Checked By:

V101

Copyright: Tetra Tech

Wednesday, August 22, 2018 10:03:10 AM DRAWING: \\TTs181fs1\projects\IER\158870\200-158870-16001\CAD\SheetFiles\V101 EXCOND .DWG LAYOUT: V101 USER NAME: EVANS, JON

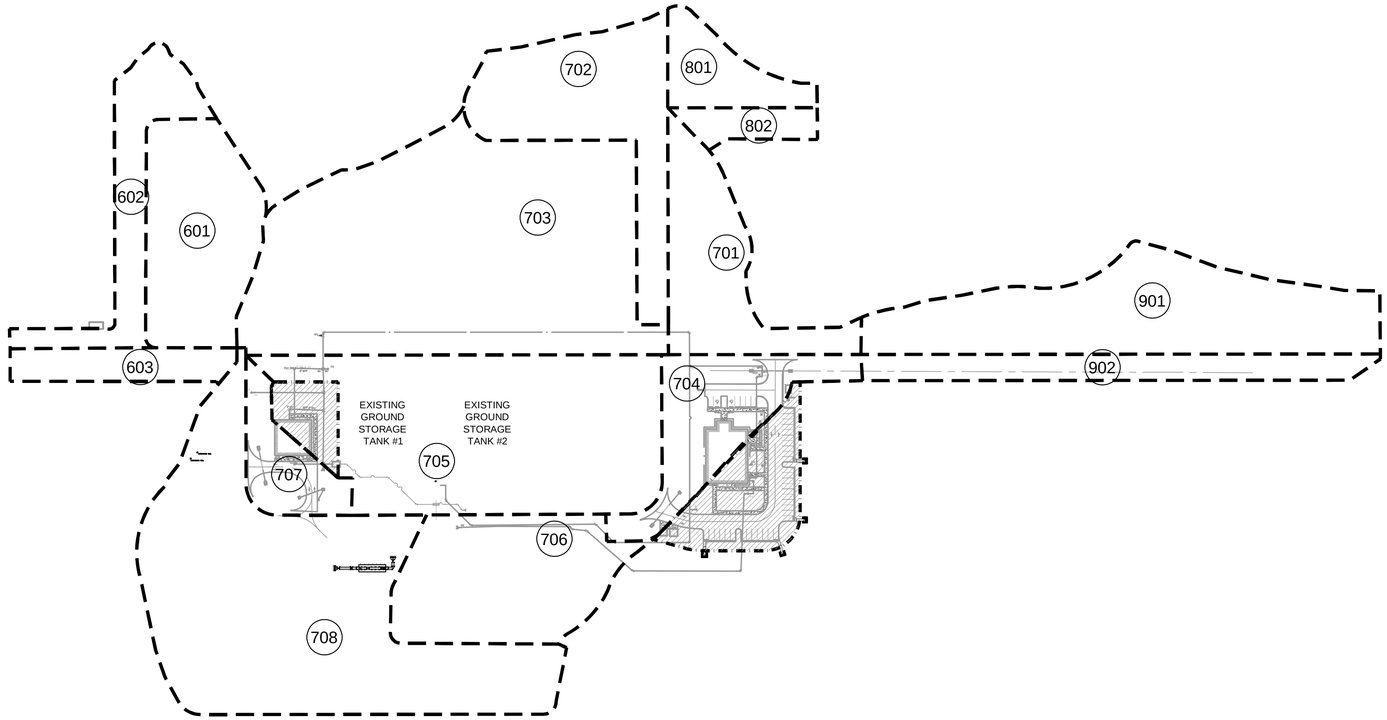

EXISTING PERMITTED DRAINAGE BASIN BOUNDARIES

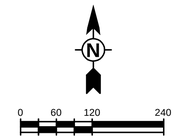

LEGEND

701 PRE DEVELOPMENT BASIN

DRAINAGE BASIN BOUNDARY

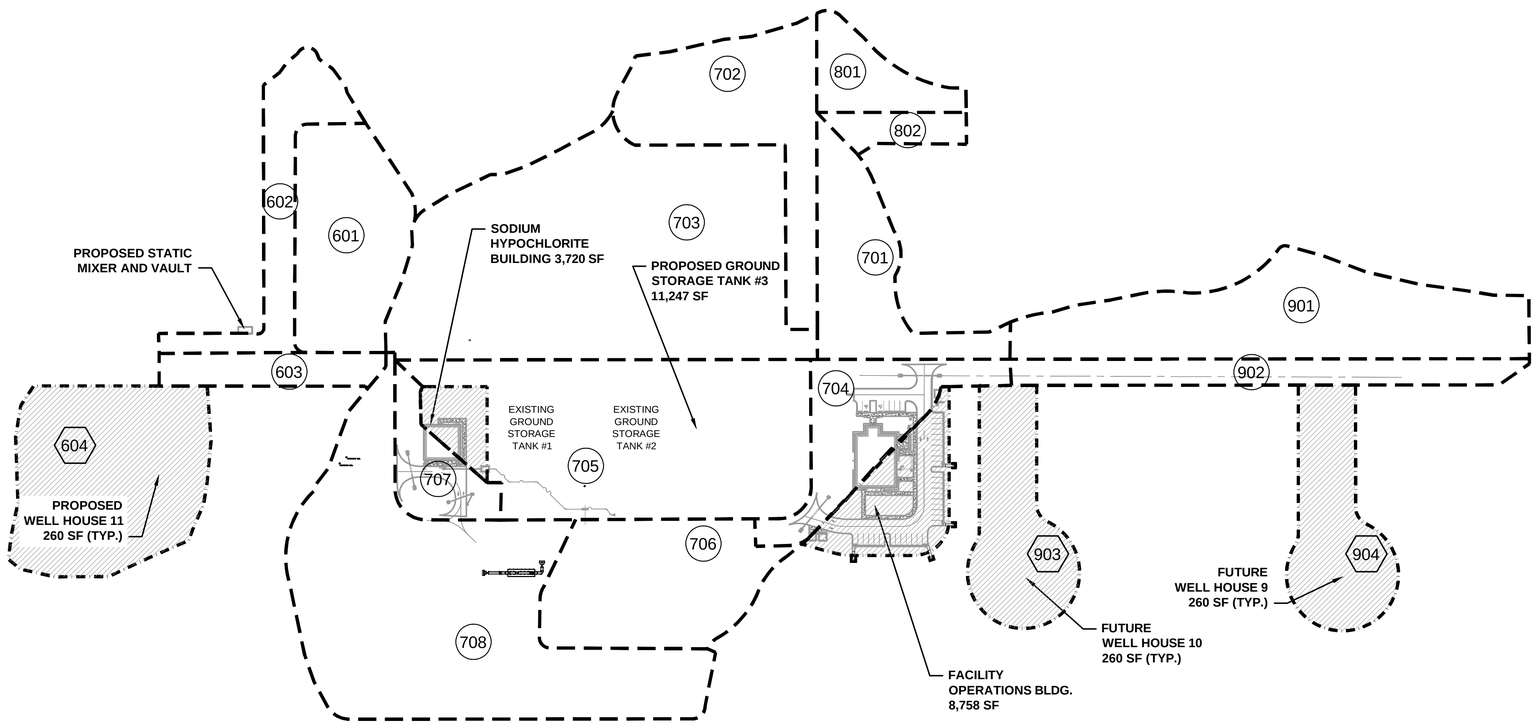

PROPOSED DRAINAGE BASIN BOUNDARIES

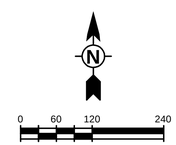

LEGEND

701 PRE DEVELOPMENT BASIN

EXIST. DRAINAGE BASIN BOUNDARY

901 POST DEVELOPMENT BASIN

POST DRAINAGE BASIN BOUNDARY NOT IN ORIGINAL PERMIT MODIFIED / ADDED

TETRA TECH
www.tetratech.com
201 EAST PINE STREET, SUITE 1000
ORLANDO, FLORIDA 32801
PHONE: (407) 839-3955 FAX: (407) 839-3790

BID SET

MARK	DATE	DESCRIPTION	BY

Client: ORANGE COUNTY UTILITIES
Proj. Loc.: ORANGE COUNTY, FL

WESTERN REGIONAL WATER SUPPLY FACILITY
IMPROVEMENTS PHASE 3B

SITE DRAINAGE BASIN MAP

Project No.: 200-158870-16001
Designed By:
Drawn By:
Checked By:

V102

Copyright: Tetra Tech

Wednesday, August 22, 2018 10:03:31 AM DRAWING: \\TTs1815\projects\IER\158870\200-158870-16001\CAD\SheetFiles\V102 BASIN MAP .DWG LAYOUT: V102 USER NAME: EVANS, JON

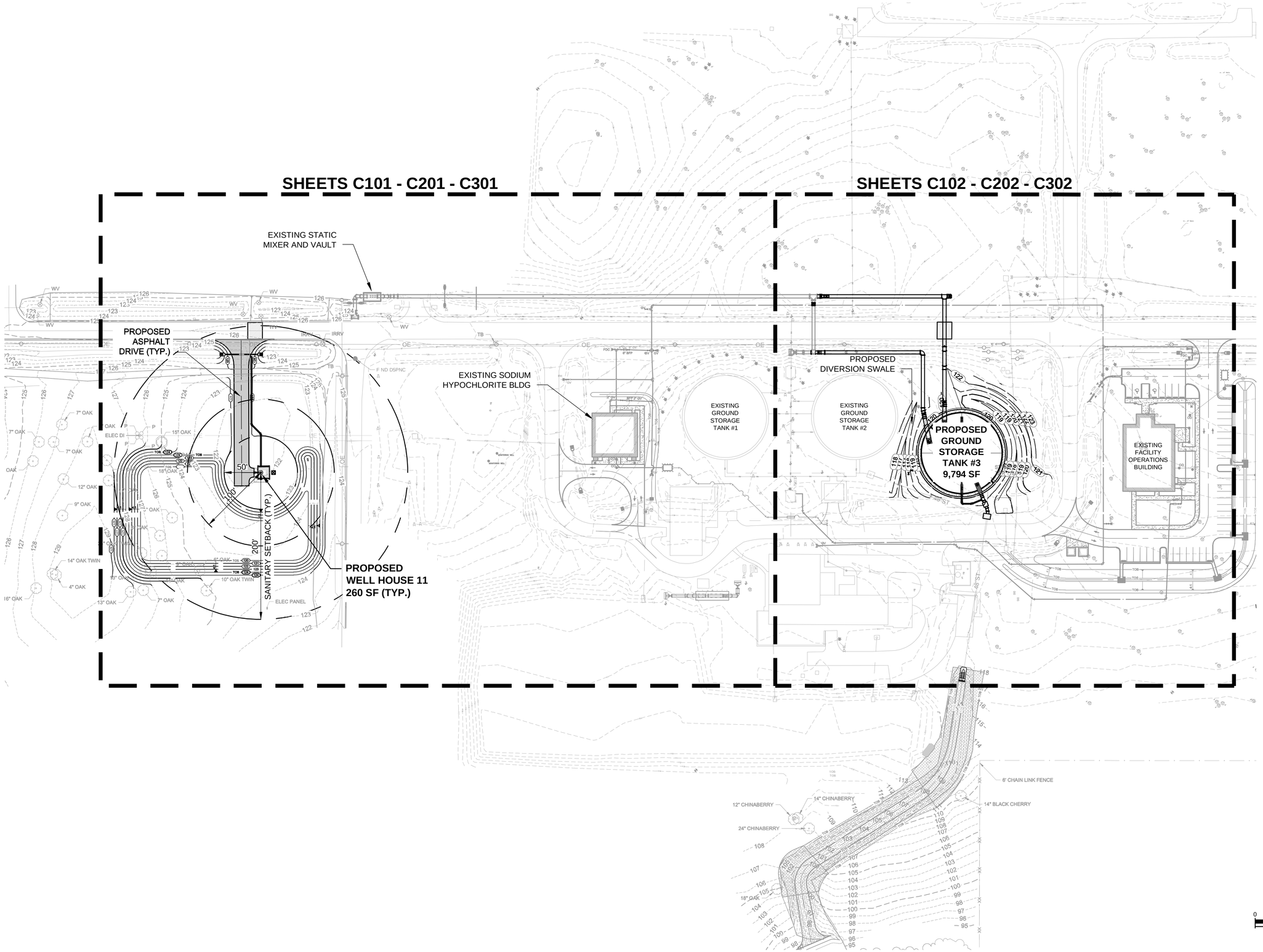

TETRA TECH

www.tetratech.com
201 EAST PINE STREET, SUITE 1000
ORLANDO, FLORIDA 32801
PHONE: (407) 839-3955 FAX: (407) 839-3790

BID SET

MARK	DATE	DESCRIPTION	BY

Client: ORANGE COUNTY UTILITIES
Proj. Loc.: ORANGE COUNTY, FL

WESTERN REGIONAL WATER SUPPLY FACILITY
IMPROVEMENTS PHASE 3B

OVERALL SITE KEY PLAN

Project No.:	200-158870-16001
Designed By:	HL
Drawn By:	HL
Checked By:	JRW

C100

Wednesday, August 22, 2018 10:06:39 AM DRAWING: \\TTS181F-S1\Projects\IER\158870\200-158870-16001\CAD\SheetFiles\C100-KEYPLAN .DWG LAYOUT: C100 OVERALL SITE KEY PLAN USER NAME: EVANS, JON

Copyright: Tetra Tech

PROPOSED POND LINE TABLE

LINE No.	LENGTH	DIRECTION	START POINT	END POINT
L1	198.39	N89° 58' 00.76"E	N=1564739.11, E=499576.09	N=1564739.22, E=499774.48
L2	103.72	S0° 00' 00.00"E	N=1564868.83, E=499550.09	N=1564765.11, E=499550.09
L3	84.91	N90° 00' 00.00"W	N=1564898.83, E=499665.00	N=1564898.83, E=499580.09
L4	8.83	N0° 00' 00.00"E	N=1564875.00, E=499680.00	N=1564883.83, E=499680.00
L5	1.36	N90° 00' 00.00"W	N=1564910.20, E=499794.51	N=1564910.20, E=499793.14
L6	118.99	N0° 02' 15.00"E	N=1564775.20, E=499810.43	N=1564894.19, E=499810.51
L7	18.00	N0° 12' 25.79"W	N=1564856.91, E=499703.90	N=1564874.91, E=499703.83
L8	17.17	N89° 47' 34.21"E	N=1564874.91, E=499703.83	N=1564874.97, E=499721.00
L13	181.64	N0° 12' 25.79"W	N=1564874.91, E=499703.83	N=1565056.54, E=499703.18

PROPOSED POND CURVE TABLE

CURVE No.	RADIUS	Δ	CHORD LENGTH	CHORD DIR.	CURVE LENGTH
C1	26.00	90°00'00.00"	36.77	S45° 00' 00"E	40.84
C2	30.00	90°00'00.00"	42.43	S45° 00' 00"W	47.12
C3	15.00	90°00'00.00"	21.21	N45° 00' 00"W	23.56
C4	50.00	196°54'54.00"	98.91	S81° 32' 33"W	171.84
C5	16.00	106°54'54.00"	25.71	S36° 32' 33"W	29.86
C6	16.00	90°02'15.00"	22.63	N44° 58' 53"W	25.14
C7	36.00	89°53'00.41"	50.86	N44° 58' 45"E	56.48

LEGEND

- PROPOSED ASPHALT PAVEMENT
- PROPOSED CONCRETE
- PROPOSED SWALE

8 C504

3 C502

N

0 15' 30' 60'

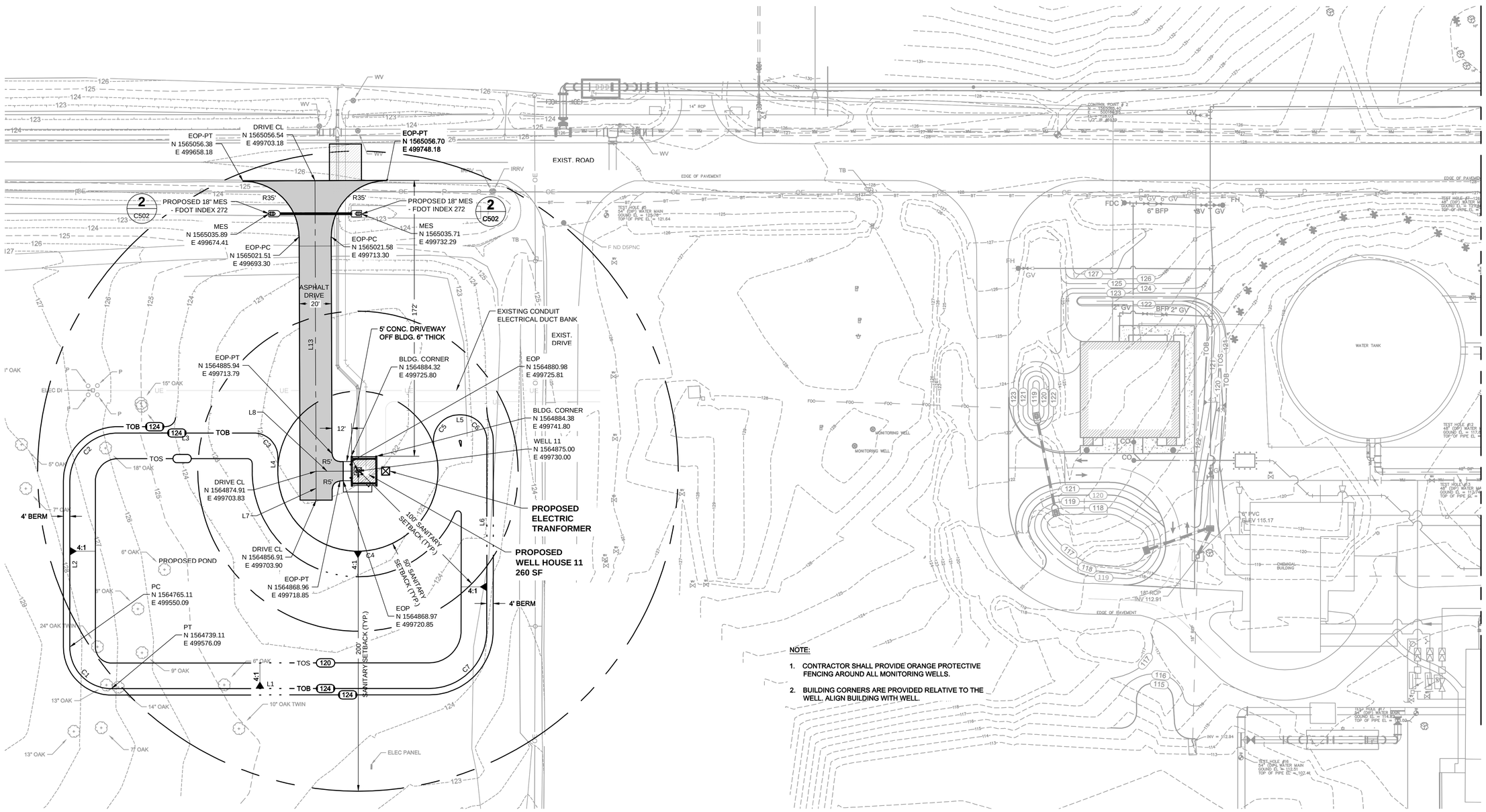

NOTE:

1. CONTRACTOR SHALL PROVIDE ORANGE PROTECTIVE FENCING AROUND ALL MONITORING WELLS.
2. BUILDING CORNERS ARE PROVIDED RELATIVE TO THE WELL. ALIGN BUILDING WITH WELL.

TETRA TECH
www.tetratech.com
201 EAST PINE STREET, SUITE 1000
ORLANDO, FLORIDA 32801
PHONE: (407) 839-3955 FAX: (407) 839-3790

BID SET

MARK	DATE	DESCRIPTION	BY

Client: ORANGE COUNTY UTILITIES
Proj. Loc.: ORANGE COUNTY, FL

WESTERN REGIONAL WATER SUPPLY FACILITY
IMPROVEMENTS PHASE 3B

SITE GEOMETRY PLAN

Project No.: 200-158870-16001
Designed By:
Drawn By:
Checked By:

C101

Copyright: Tetra Tech

Wednesday, August 22, 2018 10:12:08 AM DRAWING: \\TTs181s1\projects\IER\158870\200-158870-16001\CAD\SheetFiles\C101-C102.SITE .DWG LAYOUT: C101 USER NAME: EVANS, JON

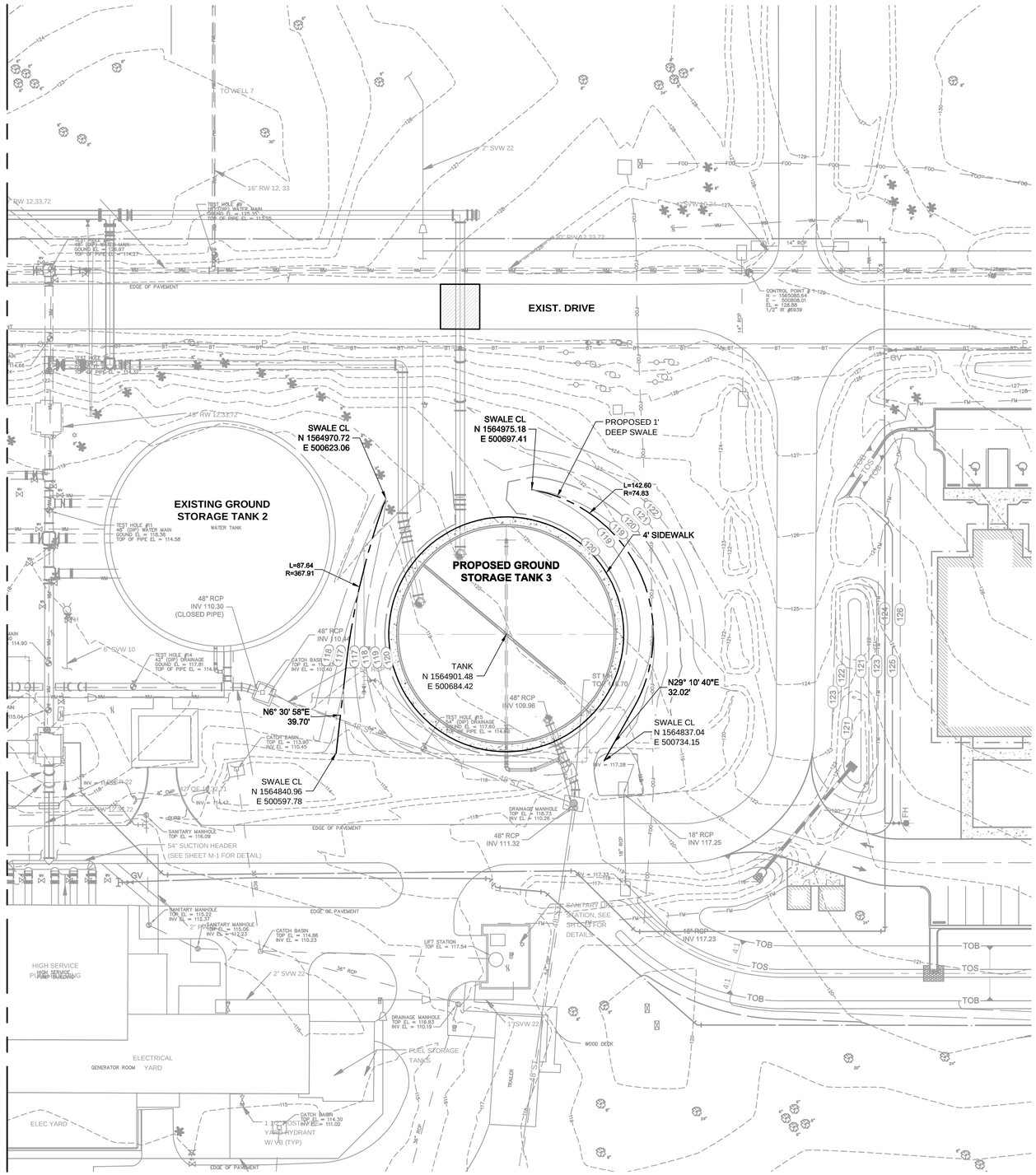

LEGEND

- PROPOSED ASPHALT PAVEMENT (8 / C504)
- PROPOSED CONCRETE PAVEMENT
- PROPOSED SWALE

TETRA TECH
www.tetratech.com
201 EAST PINE STREET, SUITE 1000
ORLANDO, FLORIDA 32801
PHONE: (407) 839-3955 FAX: (407) 839-3790

BID SET

MARK	DATE	DESCRIPTION	BY

Client: ORANGE COUNTY UTILITIES
Proj. Loc.: ORANGE COUNTY, FL

WESTERN REGIONAL WATER SUPPLY FACILITY
IMPROVEMENTS PHASE 3B

SITE GEOMETRY PLAN

Project No.: 200-158870-16001
Designed By:
Drawn By:
Checked By:

C102

Copyright: Tetra Tech

Wednesday, August 22, 2018 10:12:13 AM DRAWING: \\TTs181fs1\projects\ER\158870\200-158870-16001\CAD\SheetFiles\C101-C102 SITE .DWG LAYOUT: C102 USER NAME: EVANS, JON

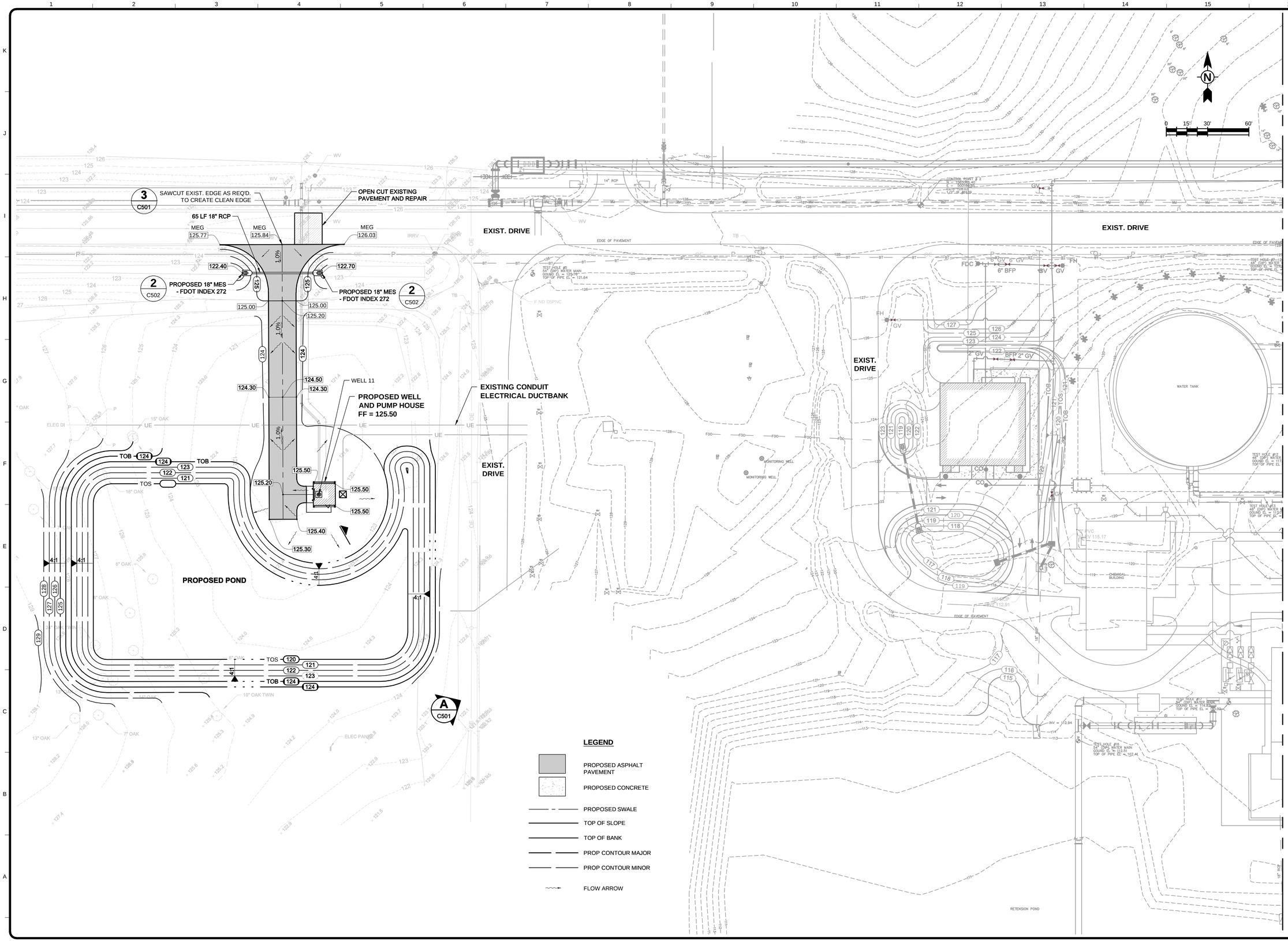

TETRA TECH
www.tetratech.com
201 EAST PINE STREET, SUITE 1000
ORLANDO, FLORIDA 32801
PHONE: (407) 839-3955 FAX: (407) 839-3790

BID SET

MARK	DATE	DESCRIPTION	BY

Client: ORANGE COUNTY UTILITIES
Proj. Loc.: ORANGE COUNTY, FL

WESTERN REGIONAL WATER SUPPLY FACILITY
IMPROVEMENTS PHASE 3B

PAVING, GRADING AND DRAINAGE PLAN

Project No.: 200-158870-16001
Designed By:
Drawn By:
Checked By:

C201

Copyright: Tetra Tech

Wednesday, August 22, 2018 10:15:48 AM DRAWING: \\TTs181s1\projects\IER\158870\200-158870-16001\CAD\SheetFiles\C201-C202 GRADING .DWG LAYOUT: C201 USER NAME: EVANS, JON

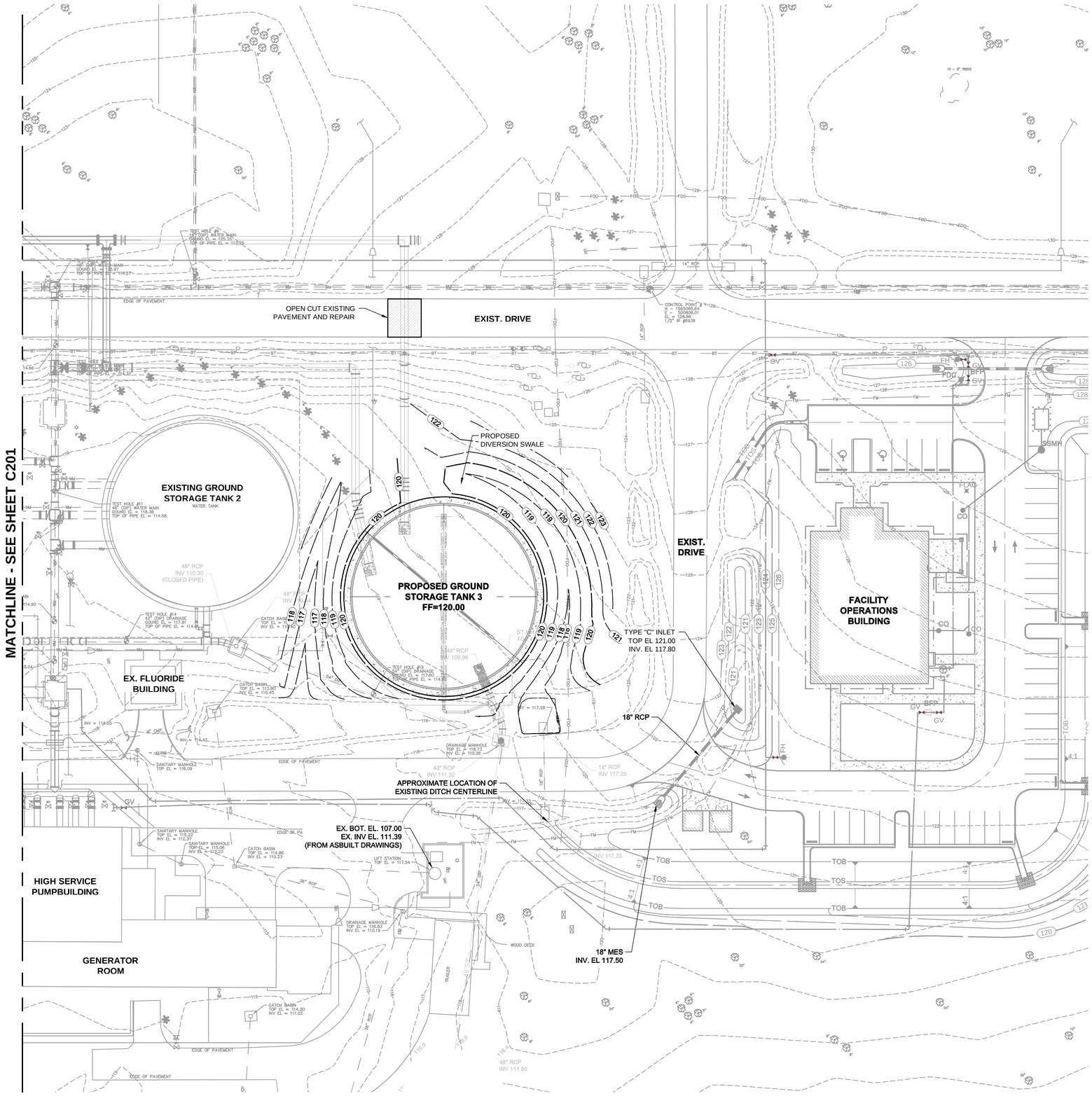

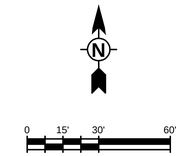

LEGEND

- PROPOSED ASPHALT PAVEMENT
- PROPOSED CONCRETE
- PROPOSED SWALE
- TOP OF SLOPE
- TOP OF BANK
- PROP CONTOUR MAJOR
- PROP CONTOUR MINOR

TETRA TECH
www.tetratech.com
201 EAST PINE STREET, SUITE 1000
ORLANDO, FLORIDA 32801
PHONE: (407) 839-3955 FAX: (407) 839-3790

BID SET

MARK	DATE	DESCRIPTION	BY

Client: ORANGE COUNTY UTILITIES
Proj. Loc.: ORANGE COUNTY, FL

WESTERN REGIONAL WATER SUPPLY FACILITY
IMPROVEMENTS PHASE 3B

PAVING, GRADING AND DRAINAGE PLAN

Project No.: 200-158870-16001
Designed By:
Drawn By:
Checked By:

C202

Copyright: Tetra Tech

Wednesday, August 22, 2018 10:15:56 AM DRAWING: \\TTs181fs1\projects\IER\158870\200-158870-16001\CAD\SheetFiles\C201-C202 GRADING .DWG LAYOUT: C202 USER NAME: EVANS, JON

LEGEND

PROPOSED ASPHALT PAVEMENT

PROPOSED CONCRETE

PROPOSED SWALE

Survey Site 1
Area : 42910.57 sq. ft.

EXISTING 54" RW

6" x 2" SERVICE SADDLE WITH 2" GATE VALVE AND VALVE BOX

REMOVE PLUG & CONNECT TO EXISTING 16" RAW WATER MAIN. CONTRACTOR SHALL FIELD VERIFY CONNECTION POINT.

ASPHALT DRIVE

2" SVW

45° BEND

45° BEND

45° BEND

2" SVW

16" RW

50' SANITARY SETBACK (TYP.)

SANITARY SETBACK (TYP.)

100' SANITARY SETBACK (TYP.)

200' SANITARY SETBACK (TYP.)

PROPOSED WELL HOUSE 11
260 SF

PROPOSED POND

EXISTING CONDUIT ELECTRICAL DUCTBANK

EXIST. DRIVE

EXIST. DRIVE

EXIST. DRIVE

EXIST. DRIVE

ELEC PANEL

NOTE:

CONNECTIONS TO STEEL PIPING SHALL BE MADE WITH A DIELECTRIC INSULATING FLANGE. SEE DETAILS 5 AND 6, SHEET C-504

EXISTING CHEMICAL BUILDING

8" METER, METER BOX AND BACKFLOW PREVENTOR ASSEMBLY FOR PLANT WATER SUPPLY

MATCHLINE - SEE SHEET C302

0 15' 30' 60'

TETRA TECH
www.tetratech.com
201 EAST PINE STREET, SUITE 1000
ORLANDO, FLORIDA 32801
PHONE: (407) 839-3955 FAX: (407) 839-3790

BID SET

MARK	DATE	DESCRIPTION	BY

Client: ORANGE COUNTY UTILITIES
Proj. Loc.: ORANGE COUNTY, FL
WESTERN REGIONAL WATER SUPPLY FACILITY IMPROVEMENTS PHASE 3B

UTILITY PLAN

Project No.: 200-158870-16001
Designed By:
Drawn By:
Checked By:

C301

Copyright: Tetra Tech

Wednesday, August 22, 2018 10:19:46 AM DRAWING: \\TTs181fs1\projects\IER\158870\200-158870-16001\CAD\SheetFiles\C301-C304 UTILITY .DWG LAYOUT: C301 USER NAME: EVANS, JON

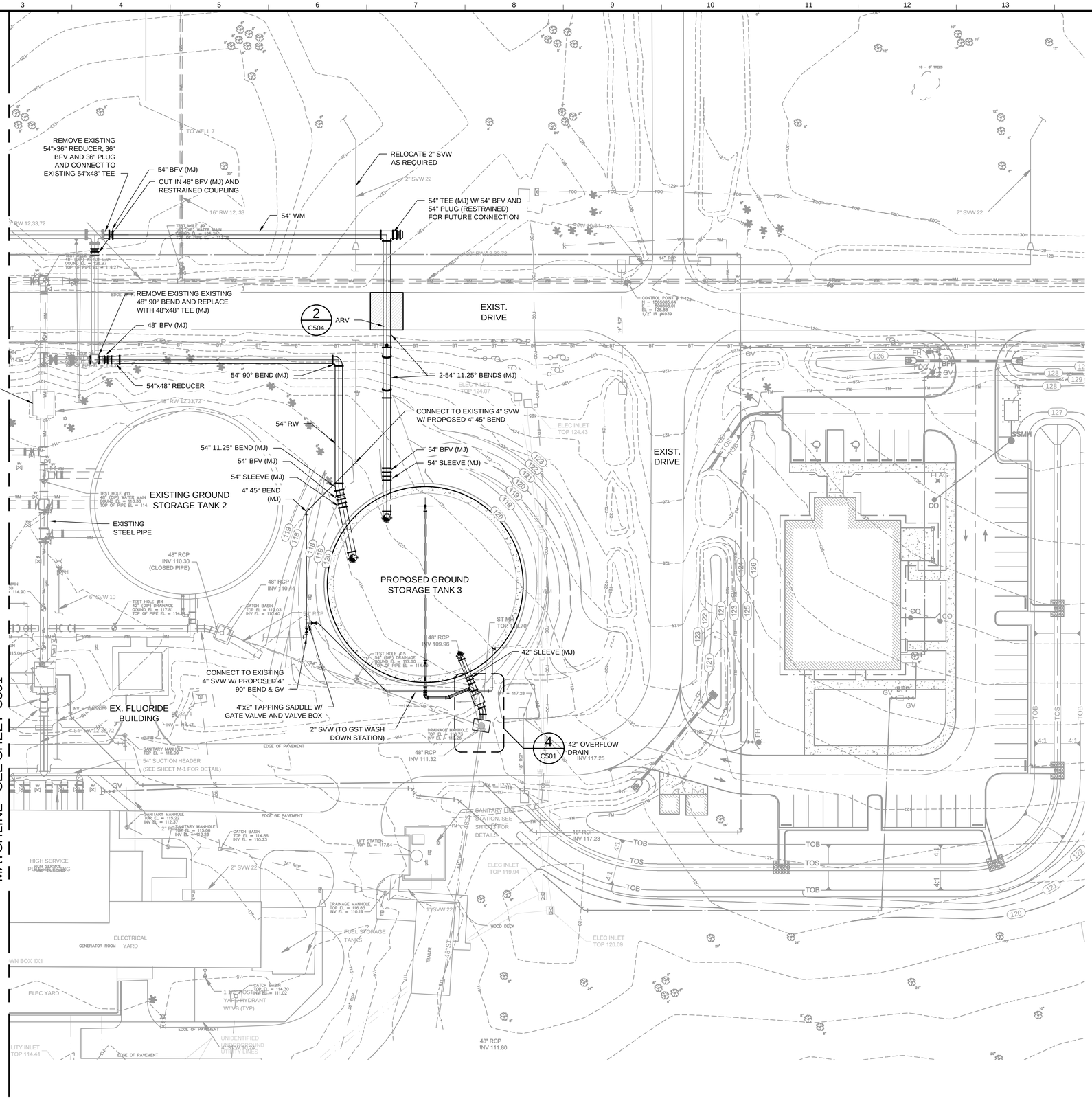

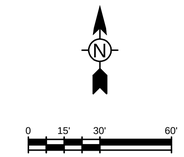

LEGEND

- PROPOSED ASPHALT PAVEMENT
- PROPOSED CONCRETE PAVEMENT
- PROPOSED SWALE

NOTES:

1. ROUTE TEMPORARY SODIUM HYPOCHLORITE FEED PIPING TO EXISTING NORTH CHEMICAL VAULT, REFER TO SPECIFICATION SECTION 01010.
2. CONNECTIONS TO STEEL PIPING SHALL BE MADE WITH DIELECTRIC INSULATING FLANGE KIT. SEE DETAILS 5 & 6, SHEET C504.

TETRA TECH
www.tetratech.com
201 EAST PINE STREET, SUITE 1000
ORLANDO, FLORIDA 32801
PHONE: (407) 839-3955 FAX: (407) 839-3790

BID SET

MARK	DATE	DESCRIPTION	BY

Client: ORANGE COUNTY UTILITIES
Proj. Loc.: ORANGE COUNTY, FL

WESTERN REGIONAL WATER SUPPLY FACILITY
IMPROVEMENTS PHASE 3B

UTILITY PLAN

Project No.: 200-158870-16001
Designed By:
Drawn By:
Checked By:

C302

Copyright: Tetra Tech

Wednesday, August 22, 2018 10:19:51 AM DRAWING: \\TTs181fs1\projects\ER\158870\200-158870-16001\CAD\SheetFiles\C301-C304 UTILITY .DWG LAYOUT: C302 USER NAME: EVANS, JON

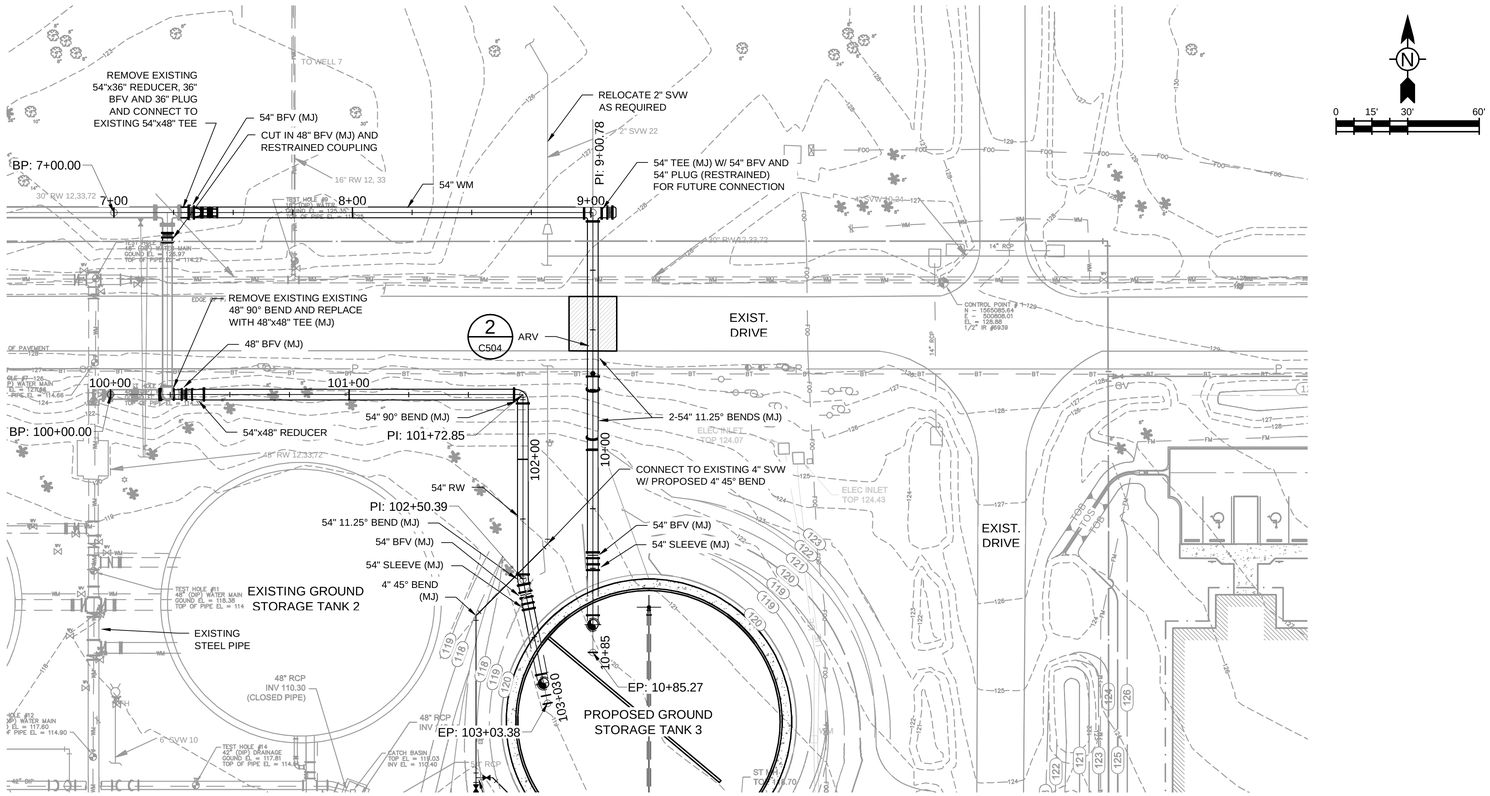

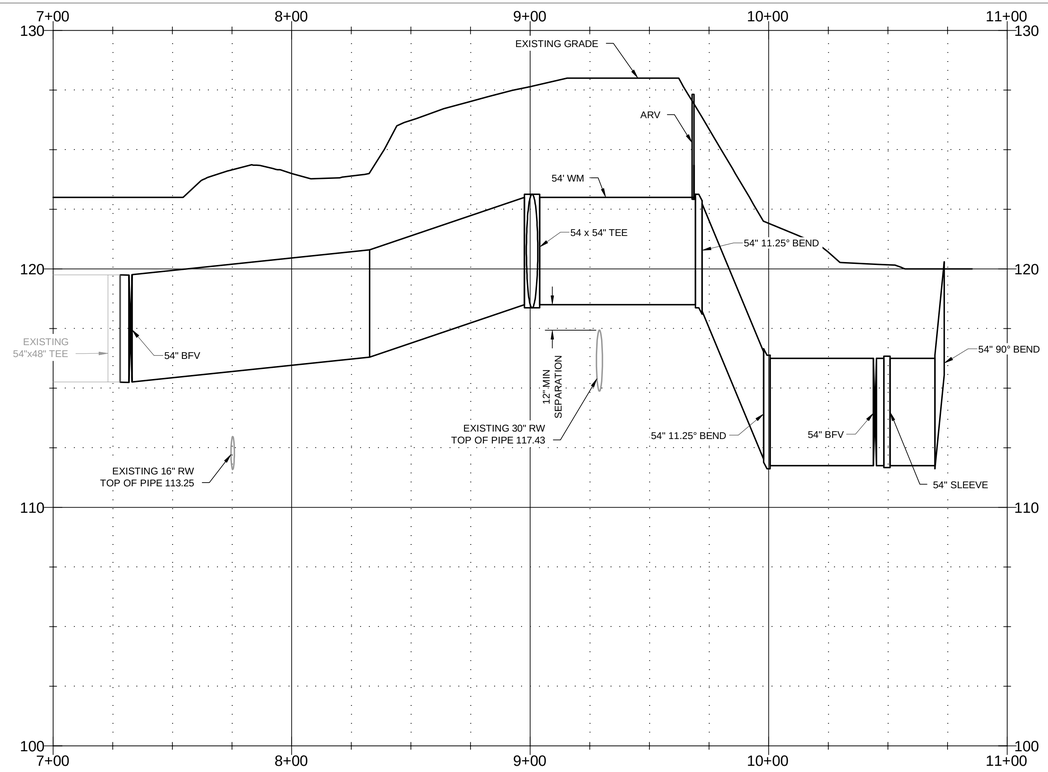

TETRA TECH
www.tetratech.com
201 EAST PINE STREET, SUITE 1000
ORLANDO, FLORIDA 32801
PHONE: (407) 839-3955 FAX: (407) 839-3790

BID SET

MARK	DATE	DESCRIPTION	BY

Client: ORANGE COUNTY UTILITIES
Proj. Loc.: ORANGE COUNTY, FL
WESTERN REGIONAL WATER SUPPLY FACILITY IMPROVEMENTS PHASE 3B

PLAN & PROFILE

Project No.: 200-158870-16001
Designed By:
Drawn By:
Checked By:

C303

Copyright: Tetra Tech

Wednesday, August 22, 2018 10:19:57 AM DRAWING: \\TTs1ft1s1\projects\IER\158870\200-158870-16001\CAD\SheetFiles\C301-C304 UTILITY .DWG LAYOUT: C303 USER NAME: EVANS, JON

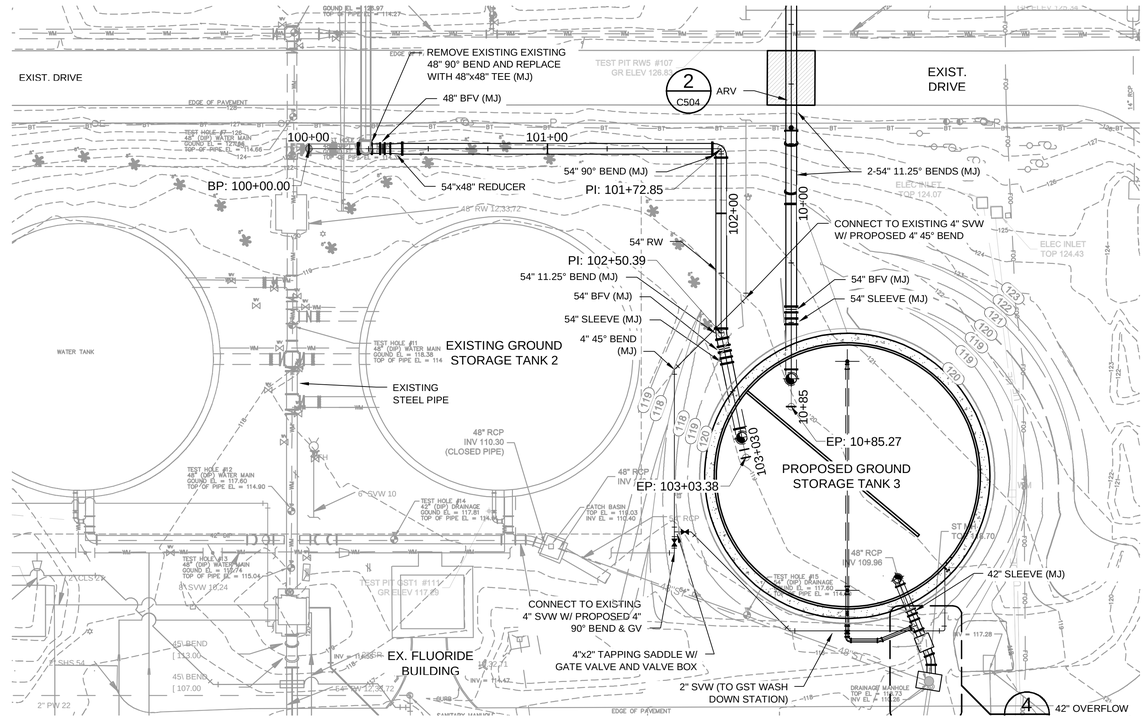

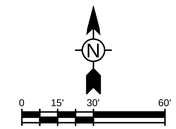

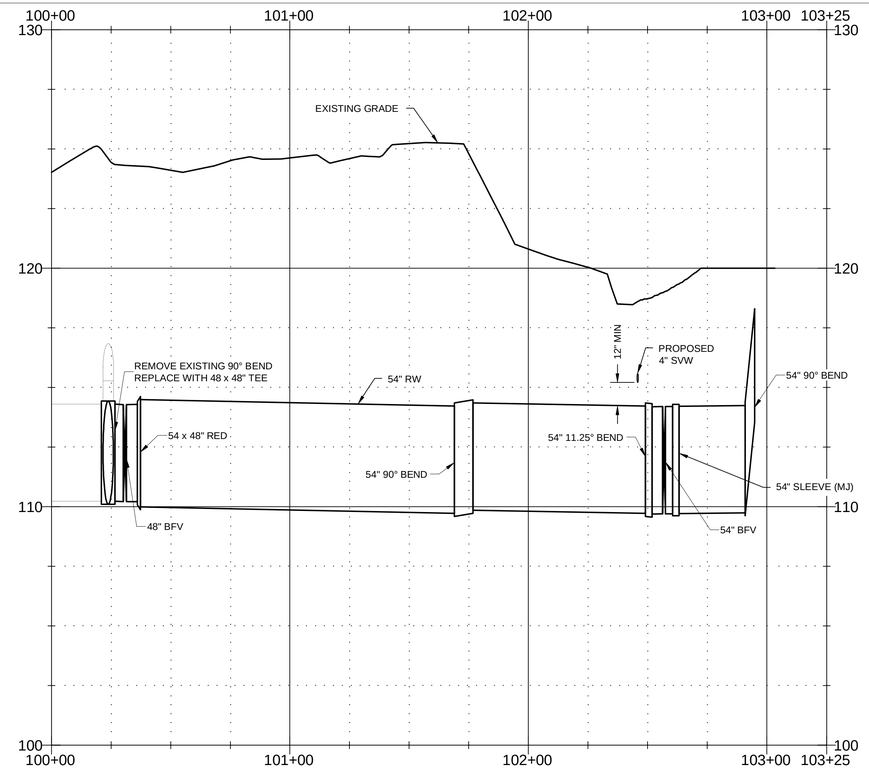

TETRA TECH

www.tetratech.com
201 EAST PINE STREET, SUITE 1000
ORLANDO, FLORIDA 32801
PHONE: (407) 839-3955 FAX: (407) 839-3790

BID SET

MARK	DATE	DESCRIPTION	BY

Client: ORANGE COUNTY UTILITIES
Proj. Loc.: ORANGE COUNTY, FL

WESTERN REGIONAL WATER SUPPLY FACILITY
IMPROVEMENTS PHASE 3B

PLAN & PROFILE

Project No.: 200-158870-16001
Designed By:
Drawn By:
Checked By:

C304

Copyright: Tetra Tech

Wednesday, August 22, 2018 10:20:02 AM DRAWING: \\TTs1ft1s1\projects\IER\158870\200-158870-16001\CAD\SheetFiles\C301-C304 UTILITY .DWG LAYOUT: C304 USER NAME: EVANS, JON

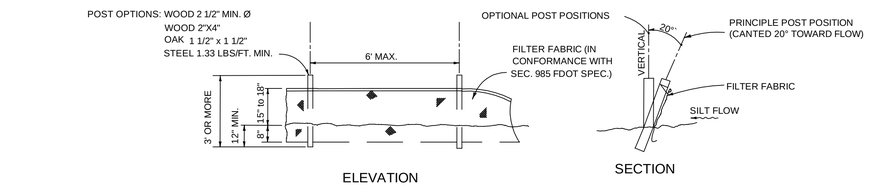

NOTE: SILT FENCE TO BE PAID FOR UNDER THE CONTRACT UNIT PRICE FOR STAKED SILT FENCE (LF).

TYPE III SILT FENCE

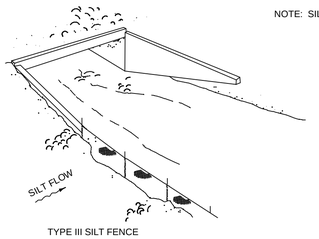

TYPE III SILT FENCE

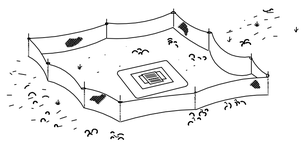

TYPE III SILT FENCE PROTECTION AROUND DITCH BOTTOM INLETS.

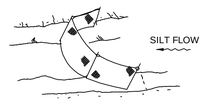

NOTE: SPACING FOR TYPE III FENCE TO BE IN ACCORDANCE WITH CHART I, SHEET 1 OF 3 AND DITCH INSTALLATIONS AT DRAINAGE STRUCTURES SHEET 2 OF 3.

TYPE III SILT FENCE

DO NOT DEPLOY IN A MANNER THAT SILT FENCES WILL ACT AS A DAM ACROSS PERMANENT FLOWING WATERCOURSES. SILT FENCES ARE TO BE USED AT UPLAND LOCATIONS AND TURBIDITY BARRIERS USED AT PERMANENT BODIES OF WATER.

SILT FENCE APPLICATIONS

DETAIL 1
SCALE: N.T.S.

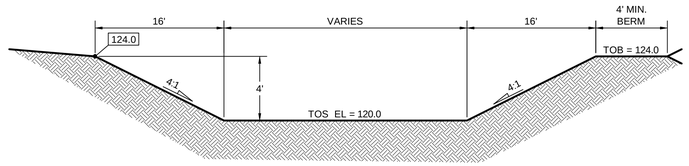

POND SECTION AT WELL 11

DETAIL A
SCALE: N.T.S.

NOTE:
SOD SLOPES, BANKS AND BERMS

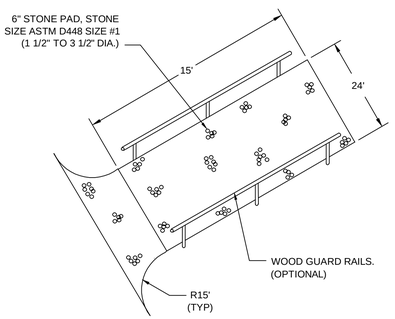

CONSTRUCTION ENTRANCE

DETAIL 2
SCALE: N.T.S.

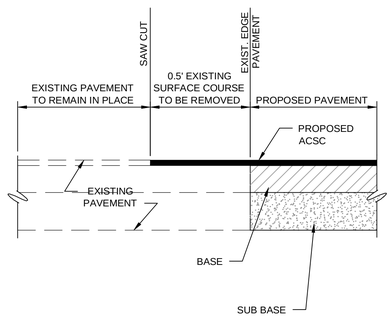

SAWCUT

DETAIL 3
SCALE: N.T.S.

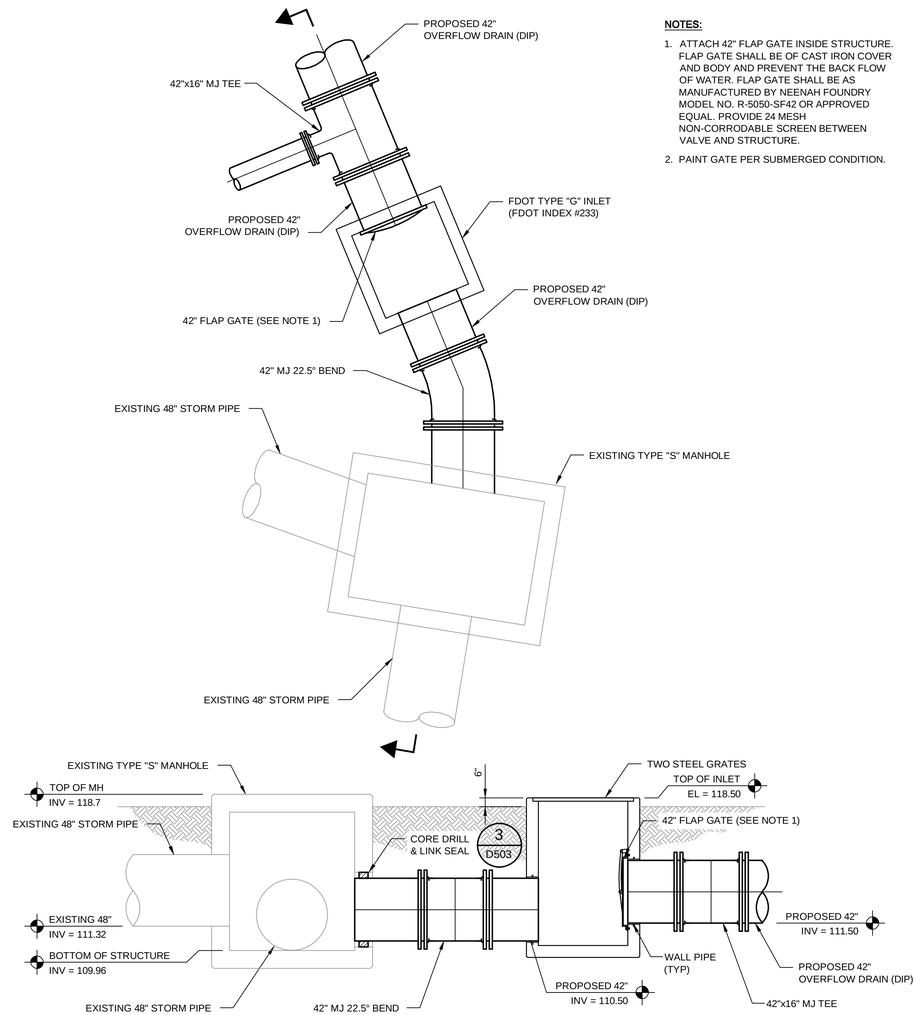

NOTES:

1. ATTACH 42" FLAP GATE INSIDE STRUCTURE. FLAP GATE SHALL BE OF CAST IRON COVER AND BODY AND PREVENT THE BACK FLOW OF WATER. FLAP GATE SHALL BE AS MANUFACTURED BY NEENAH FOUNDRY MODEL NO. R-5050-SF42 OR APPROVED EQUAL. PROVIDE 24 MESH NON-CORRODABLE SCREEN BETWEEN VALVE AND STRUCTURE.
2. PAINT GATE PER SUBMERGED CONDITION.

GST OVERFLOW / DRAIN

DETAIL 4
SCALE: N.T.S.

TETRA TECH
www.tetratech.com
201 EAST PINE STREET, SUITE 1000
ORLANDO, FLORIDA 32801
PHONE: (407) 839-3955 FAX: (407) 839-3790

BID SET

MARK	DATE	DESCRIPTION	BY

Client: ORANGE COUNTY UTILITIES
Proj. Loc.: ORANGE COUNTY, FL

WESTERN REGIONAL WATER SUPPLY FACILITY
IMPROVEMENTS PHASE 3B

CIVIL DETAILS

Project No.: 200-158870-16001
Designed By:
Drawn By:
Checked By:

C501

Copyright: Tetra Tech

Wednesday, August 22, 2018 10:20:15 AM DRAWING: \\TTS181FS1\Projects\ER\158870\200-158870-16001\CAD\SheetFiles\C500-DETAILS .DWG LAYOUT: C501 USER NAME: EVANS, JON

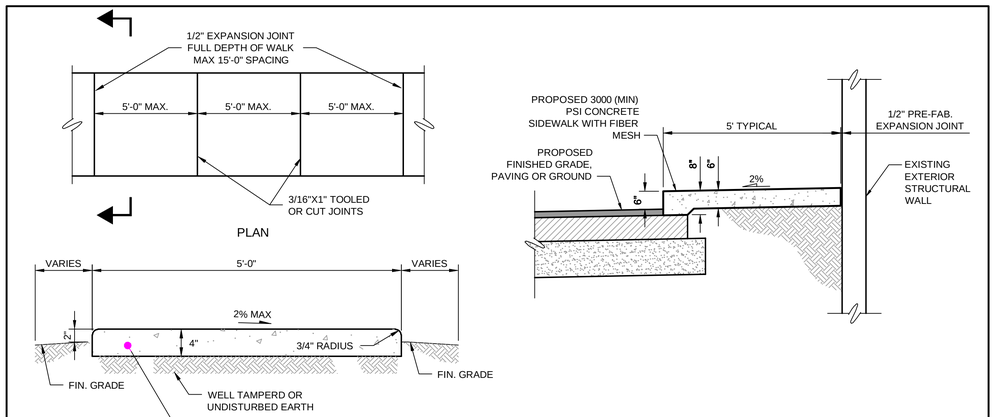

CONCRETE SIDEWALK

DETAIL 1

SCALE: N.T.S.

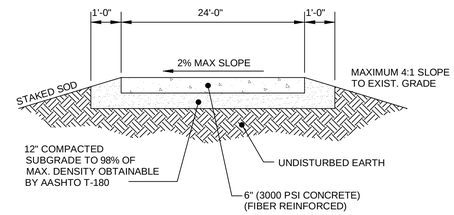

CONCRETE DRIVEWAY

DETAIL 3

SCALE: N.T.S.

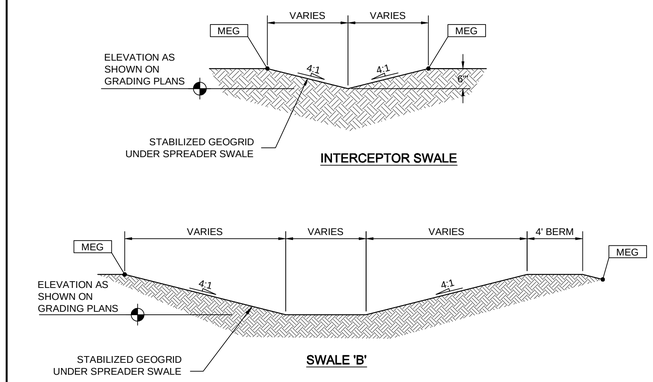

SWALE

DETAIL 4

SCALE: N.T.S.

NOTE:
SOD SLOPES, BANKS AND BERMS

DIMENSIONS & QUANTITIES

	Rise R	Span S	X	A	B	C	E	F	G	H ■	M Single Pipe	M Double Pipe	M Triple Pipe	M Quad. Pipe	N	N	5 1/8" CONC. SLAB (CY) ◪ Single Pipe	5 1/8" CONC. SLAB (CY) ◪ Double Pipe	5 1/8" CONC. SLAB (CY) ◪ Triple Pipe	5 1/8" CONC. SLAB (CY) ◪ Quad. Pipe	SODDING (SQ. YDS.) Single Pipe	SODDING (SQ. YDS.) Double Pipe	SODDING (SQ. YDS.) Triple Pipe	SODDING (SQ. YDS.) Quad. Pipe
1:2 Slope	12"	18"	2'-10"	1.97'	1.62'	3.59'	1.56'	4'	1.50'	2.4'	4.92'	7.75'	10.58'	13.42'	1.21'		0.30	0.49	0.67	0.85	21	24	27	30
	14"	23"	3'-4"	2.01'	1.92'	4.00'	1.89'	5'	1.90'	3.1'	5.38'	8.21'	12.04'	15.38'	1.23'		0.37	0.59	0.81	1.03	22	26	29	33
	19"	30"	4'-0"	2.11'	2.32'	5.03'	2.13'	6'	2.37'	3.3'	6.04'	10.04'	14.04'	18.04'	1.27'		0.50	0.80	1.09	1.39	24	28	33	37
	24"	38"	5'-0"	2.20'	3.85'	6.05'	3.56'	7'	2.85'	3.4'	6.79'	11.79'	16.79'	21.79'	1.31'		0.62	1.03	1.45	1.86	26	31	37	42
	29"	45"	5'-11"	2.34'	4.79'	7.19'	4.39'	8'	3.19'	3.6'	7.50'	13.42'	19.33'	25.25'	1.38'		0.75	1.30	1.84	2.39	28	34	41	47
	34"	53"	7'-0"	2.43'	5.72'	8.15'	5.23'	9'	3.57'	3.8'	8.25'	15.25'	22.25'	29.25'	1.42'		0.90	1.61	2.32	3.03	30	37	45	53
	38"	60"	7'-10"	2.52'	6.46'	8.98'	5.89'	9'	3.95'	3.1'	8.92'	16.75'	24.58'	32.42'	1.46'		1.03	1.89	2.74	3.60	31	40	49	57
	43"	68"	8'-11"	2.62'	7.39'	10.01'	6.73'	10'	4.28'	3.3'	9.67'	18.58'	27.50'	36.42'	1.50'		1.19	2.26	3.33	4.40	33	43	53	63
	48"	76"	9'-11"	2.71'	8.33'	11.04'	7.56'	11'	4.59'	3.4'	10.42'	20.33'	30.25'	40.17'	1.54'		1.38	2.65	3.93	5.21	35	46	57	68
	53"	83"	10'-8"	2.80'	9.26'	12.06'	8.39'	12'	4.77'	3.6'	11.08'	21.75'	32.42'	43.08'	1.58'		1.55	3.03	4.50	5.96	37	49	61	73
	58"	91"	11'-8"	2.90'	10.19'	13.09'	9.23'	13'	5.01'	3.8'	11.83'	23.50'	35.17'	46.83'	1.63'		1.75	3.47	5.20	6.93	39	52	65	78
1:4 Slope	12"	18"	2'-10"	2.36'	3.06'	5.42'	3.03'	5'	1.50'	2.0'	4.92'	7.75'	10.58'	13.42'	1.21'		0.45	0.68	0.92	1.14	23	26	29	32
	14"	23"	3'-4"	2.44'	3.75'	6.19'	3.70'	6'	1.90'	2.3'	5.38'	8.21'	12.04'	15.38'	1.23'		0.53	0.83	1.13	1.42	24	28	32	35
	19"	30"	4'-0"	2.62'	5.47'	8.09'	5.36'	8'	2.37'	2.6'	6.04'	10.04'	14.04'	18.04'	1.27'		0.74	1.15	1.57	1.98	27	32	36	40
	24"	38"	5'-0"	2.79'	7.18'	9.97'	7.03'	10'	2.85'	3.0'	6.79'	11.79'	16.79'	21.79'	1.31'		0.97	1.57	2.19	2.81	30	36	41	47
	29"	45"	5'-11"	3.05'	8.90'	11.90'	8.70'	12'	3.19'	3.3'	7.50'	13.42'	19.33'	25.25'	1.38'		1.22	2.07	2.92	3.77	33	40	46	53
	34"	53"	7'-0"	3.22'	10.62'	13.84'	10.36'	13'	3.57'	2.6'	8.25'	15.25'	22.25'	29.25'	1.42'		1.48	2.62	3.77	4.92	36	44	52	59
	38"	60"	7'-10"	3.39'	11.99'	15.38'	11.70'	15'	3.95'	3.3'	8.92'	16.75'	24.58'	32.42'	1.46'		1.72	3.12	4.53	5.92	38	47	56	65
	43"	68"	8'-11"	3.56'	13.71'	17.27'	13.36'	17'	4.28'	3.6'	9.67'	18.58'	27.50'	36.42'	1.50'		2.02	3.78	5.56	7.35	41	51	61	71
	48"	76"	9'-11"	3.73'	15.43'	19.16'	15.03'	19'	4.59'	4.0'	10.42'	20.33'	30.25'	40.17'	1.54'		2.34	4.49	6.64	8.79	44	55	66	77
	53"	83"	10'-8"	3.91'	17.15'	21.06'	16.70'	20'	4.77'	3.3'	11.08'	21.75'	32.42'	43.08'	1.58'		2.66	5.11	7.66	10.16	47	59	71	83
	58"	91"	11'-8"	4.08'	18.87'	22.95'	18.36'	22'	5.01'	3.6'	11.83'	23.50'	35.17'	46.83'	1.63'		3.02	5.98	8.95	11.90	50	63	76	89

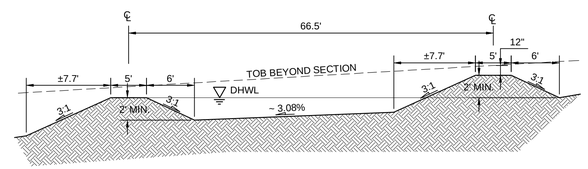

CHECK DAM SECTION

DETAIL 5

SCALE: N.T.S.

NOTE:
SOD SLOPES, BANKS AND BERMS

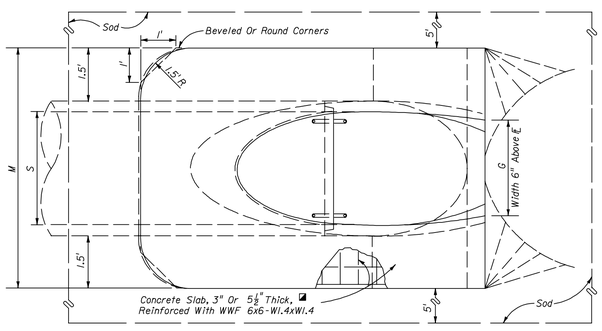

TOP VIEW-SINGLE PIPE

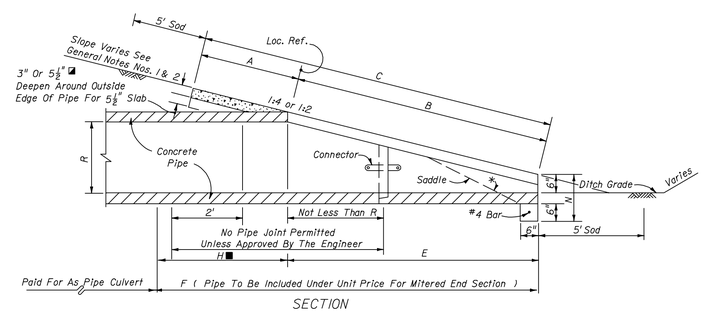

SECTION

◪ See General Note No. 3.
See Sheet 5 Of 6 For 3" Slab Quantities

■ Values shown for estimating pipe quantities and are for information only.

*Slope: 1:4 Miter: To Major Axis For Pipes 24"x38" And Smaller.
1:2 For Pipes 29"x45" And Larger.

1:2 Miter: To Major Axis For Pipes 29"x45" And Smaller.
1:1 For Pipes 34"x53" And Larger.

MITERED END SECTION

DETAIL 2

SCALE: N.T.S.

TETRA TECH
www.tetratech.com
201 EAST PINE STREET, SUITE 1000
ORLANDO, FLORIDA 32801
PHONE: (407) 839-3955 FAX: (407) 839-3790

BID SET

MARK	DATE	DESCRIPTION	BY

Client: ORANGE COUNTY UTILITIES
Proj. Loc.: ORANGE COUNTY, FL

WESTERN REGIONAL WATER SUPPLY FACILITY
IMPROVEMENTS PHASE 3B

CIVIL DETAILS

Project No.: 200-158870-16001
Designed By:
Drawn By:
Checked By:

C502

Copyright: Tetra Tech

Wednesday, August 22, 2018 10:20:17 AM DRAWING: \\TTS181FS1\Projects\IER\158870\200-158870-16001\CAD\SheetFiles\C500-DETAILS .DWG LAYOUT: C502 USER NAME: EVANS, JON

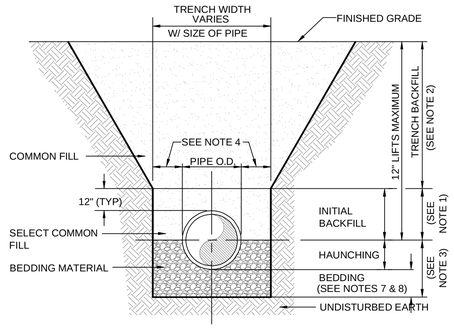

NOTES:
1. INITIAL BACKFILL: SELECT COMMON FILL COMPACTED TO 95% (98% UNDER PAVEMENT) OF THE MAXIMUM DENSITY AS PER AASHTO T-180.
2. TRENCH BACKFILL: COMMON FILL COMPACTED TO 95% (98% UNDER PAVEMENT) OF THE MAXIMUM DENSITY AS PER AASHTO T-180.
3. TYPE A BEDDING MATERIAL SHALL CONFORM TO FDOT NO. 57 AGGREGATE.
4. 15" MAX. (12" MIN.) FOR PIPE DIAMETER LESS THAN 24" AND 24" MAX (12" MIN) FOR PIPE DIAMETER 24" AND LARGER.
5. WATER SHALL NOT BE PERMITTED IN THE TRENCH DURING CONSTRUCTION.
6. ALL PIPE TO BE INSTALLED WITH BELL FACING UPSTREAM TO THE DIRECTION OF THE FLOW.
7. BEDDING DEPTH SHALL BE 4" MINIMUM FOR PIPE DIAMETER UP TO 12" AND 6" MINIMUM FOR PIPE DIAMETER 16" AND LARGER.
8. DEPTH FOR REMOVAL OF UNSUITABLE MATERIAL SHALL GOVERN DEPTH OF BEDDING ROCK BELOW THE PIPE. UTILITIES SHALL DETERMINE IN THE FIELD REQUIRED REMOVAL OF UNSUITABLE MATERIAL TO REACH SUITABLE FOUNDATION.
9. FINAL RESTORATION IN IMPROVED AREAS SHALL BE IN COMPLIANCE WITH ALL APPLICABLE REGULATIONS OF GOVERNING AGENCIES. SURFACE RESTORATION WITHIN ORANGE COUNTY RIGHT-OF-WAY SHALL COMPLY WITH REQUIREMENTS OF R/W UTILIZATION REGULATIONS AND ROAD CONSTRUCTION SPECIFICATIONS.

BEDDING AND TRENCHING - TYPE A

ORANGE COUNTY UTILITIES
STANDARDS AND CONSTRUCTION
SPECIFICATIONS MANUAL
DATE: February 11, 2011

DETAIL 1 -
SCALE: NTS

FIGURE A101

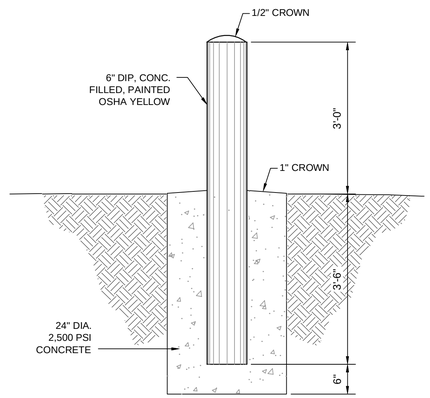

BOLLARD

DETAIL 3 -
SCALE: NTS

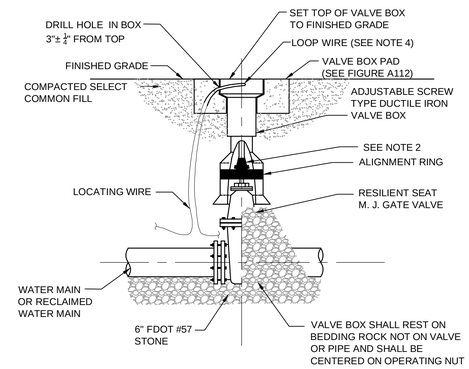

NOTES:
1. PVC PIPE OR DUCTILE IRON PIPE EXTENSIONS SHALL NOT BE USED ON VALVE BOX INSTALLATION.
2. THE VALVE ACTUATING NUT SHALL BE EXTENDED TO BE WITHIN 3' OF FINISHED GRADE.
3. PROVIDE A PLASTIC DEBRIS SHIELD / ALIGNMENT RING WHICH INSTALLS BELOW THE VALVE ACTUATING NUT. THIS SHIELD SHALL CENTER THE RISER PIPE BOX OVER THE ACTUATING NUT AND MINIMIZE INFILTRATION.
4. LOCATING WIRE SHALL BE CONTINUOUS WITH NO SPLICES AND SHALL EXTEND 12" ABOVE TOP OF COLLAR. WIRE SHALL BE COLOR CODED TO MATCH THE UTILITY INSTALLED.
5. FOR NEW CONSTRUCTION, THE VALVE BOX SHALL BE ADJUSTED TO MIDRANGE TO ALLOW FOR FUTURE BOX ADJUSTMENTS.

GATE VALVE AND BOX
WATER AND RECLAIMED WATER MAINS

ORANGE COUNTY UTILITIES
STANDARDS AND CONSTRUCTION
SPECIFICATIONS MANUAL
DATE: February 11, 2011

DETAIL 5 -
SCALE: NTS

FIGURE A107

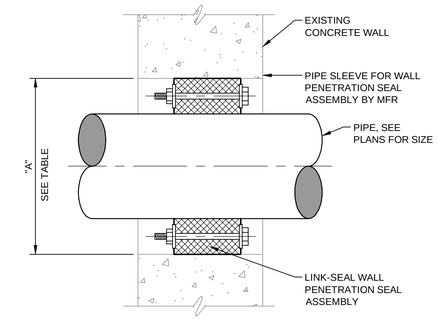

PIPE SIZE (IN)	NOMINAL OPENING "A" (IN)
1	3
2	4
2-1/2	4
3	5
4	6
6	10
8	12
10	14
12	16

PIPE SIZE (IN)	NOMINAL OPENING "A" (IN)
14	16
16	20
18	22
20	24
24	28
30	34
36	40
42	46

EXISTING WALL PENETRATION - CORE DRILL W/ LINK SEAL

DETAIL 7 -
SCALE: NTS

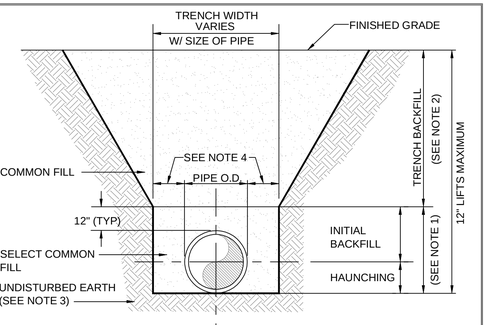

NOTES:
1. INITIAL BACKFILL AND HAUNCHING: SELECT COMMON FILL COMPACTED TO 95% (98% UNDER PAVEMENT) OF THE MAXIMUM DENSITY AS PER AASHTO T-180.
2. TRENCH BACKFILL: COMMON FILL COMPACTED TO 95% (98% UNDER PAVEMENT) OF THE MAXIMUM DENSITY AS PER AASHTO T-180.
3. PIPE BEDDING UTILIZING SELECT COMMON FILL OR BEDDING ROCK IN ACCORDANCE WITH TYPE A BEDDING AND TRENCHING DETAIL MAY BE REQUIRED AS DIRECTED BY UTILITIES.
4. 15" MAX. (12" MIN.) FOR PIPE DIAMETER LESS THAN 24" AND 24" MAX (12" MIN) FOR PIPE DIAMETER 24" AND LARGER.
5. WATER SHALL NOT BE PERMITTED IN THE TRENCH DURING CONSTRUCTION.
6. ALL PIPE TO BE INSTALLED WITH BELL FACING UPSTREAM TO THE DIRECTION OF THE FLOW.
7. FINAL RESTORATION IN IMPROVED AREAS SHALL BE IN COMPLIANCE WITH ALL APPLICABLE REGULATIONS OF GOVERNING AGENCIES. SURFACE RESTORATION WITHIN ORANGE COUNTY RIGHT-OF-WAY SHALL COMPLY WITH REQUIREMENTS OF RIGHT-OF-WAY UTILIZATION REGULATIONS AND ROAD CONSTRUCTION SPECIFICATIONS.

BEDDING AND TRENCHING - TYPE B

ORANGE COUNTY UTILITIES
STANDARDS AND CONSTRUCTION
SPECIFICATIONS MANUAL
DATE: February 11, 2011

DETAIL 2 -
SCALE: NTS

FIGURE A102

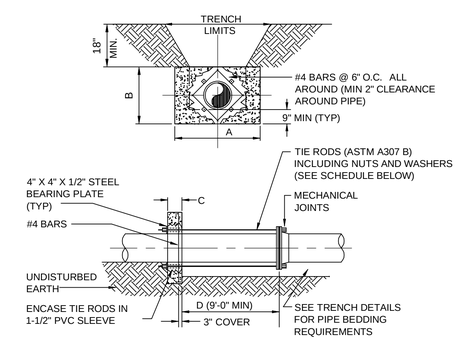

NOTES:
1. ADDITIONAL REINFORCEMENTS SHALL BE AS SPECIFIED BY THE ENGINEER.
2. MINIMUM COMPRESSIVE STRENGTH FOR CONCRETE SHALL BE 3000 PSI.
3. BEDDING, BACKFILL AND COMPACTION SHALL BE AS SPECIFIED ELSEWHERE IN THE STANDARD DRAWINGS.
4. ALL FORM BOARDS SHALL BE REMOVED PRIOR TO BACKFILL.
5. NO ALLOWANCE SHALL BE MADE FOR FRICTION BETWEEN THE PIPE WALL AND THE THRUST COLLAR.
6. DESIGN PRESSURE: 150 PSI.
7. REQUIRED FOR LINE STOPS.

SCHEDULE OF DIMENSIONS AND MATERIALS

PIPE SIZE (INCHES)	DIMENSIONS (FT.) A	B	C	D	TIE RODS REQ'D DIA.	NO.
6	2.0	2.0	1.0		3/4	2
8	2.5	2.5	1.0		3/4	2
10	3.5	3.0	1.0		3/4	4
12	5.0	3.0	1.0		3/4	4
16	6.0	4.0	1.5		3/4	4
20	8.0	5.0	1.5		3/4	6
24	9.0	6.0	1.5		3/4	8

NOTE: THRUST COLLAR AREAS TO BE COMPUTED ON BASIS OF 2000 LBS/SF SOIL RESTRAINT BEARING.

THRUST COLLAR (150 psi)
WATER AND RECLAIMED WATER MAINS

ORANGE COUNTY UTILITIES
STANDARDS AND CONSTRUCTION
SPECIFICATIONS MANUAL
DATE: February 11, 2011

DETAIL 4 -
SCALE: NTS

FIGURE A105-1

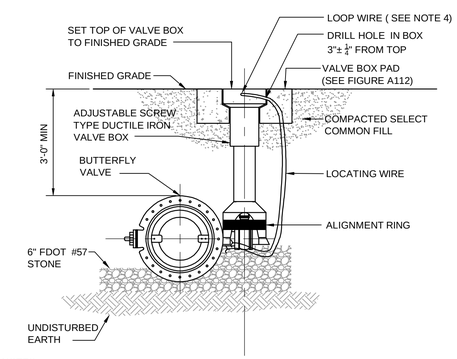

NOTES:
1. PVC PIPE OR DUCTILE IRON PIPE EXTENSIONS SHALL NOT BE USED ON VALVE BOX INSTALLATION.
2. THE VALVE ACTUATING NUT SHALL BE EXTENDED TO BE WITHIN 3' OF FINISHED GRADE.
3. PROVIDE A PLASTIC DEBRIS SHIELD / ALIGNMENT RING WHICH INSTALLS BELOW THE VALVE ACTUATING NUT. THIS SHIELD SHALL CENTER THE RISER PIPE BOX OVER THE ACTUATING NUT AND MINIMIZE INFILTRATION.
4. LOCATING WIRE SHALL BE CONTINUOUS WITH NO SPLICES AND SHALL EXTEND 12" ABOVE TOP OF COLLAR. WIRE SHALL BE COLOR CODED TO MATCH THE UTILITY INSTALLED.
5. FOR NEW CONSTRUCTION, THE VALVE BOX SHALL BE ADJUSTED TO MIDRANGE TO ALLOW FOR FUTURE BOX ADJUSTMENTS.

ORANGE COUNTY UTILITIES
STANDARDS AND CONSTRUCTION
SPECIFICATIONS MANUAL
DATE: February 11, 2011

FIGURE A108

BUTTERFLY VALVE AND BOX
WATER AND RECLAIMED WATER MAINS

DETAIL 6 -
SCALE: NTS

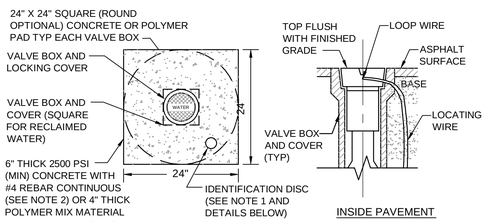

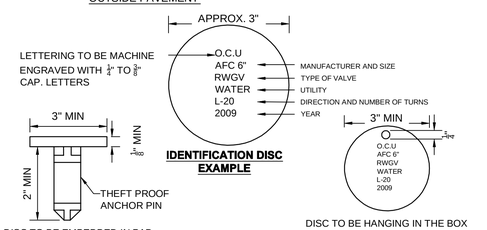

NOTES:
1. BRONZE (OR STAINLESS STEEL) IDENTIFICATION DISC SHALL BE REQUIRED FOR ALL VALVES, EXCEPT HYDRANT VALVES.
2. IN LIEU OF PRECAST CONCRETE PAD, A 6" THICK X 24" (ROUND OR SQUARE) POURED CONCRETE PAD WITH TWO #4 REBAR AROUND PERIMETER MAY BE USED.

ORANGE COUNTY UTILITIES
STANDARDS AND CONSTRUCTION
SPECIFICATIONS MANUAL
DATE: February 11, 2011

VALVE COLLAR

DETAIL 8 -
SCALE: NTS

FIGURE A112

TETRA TECH
www.tetratech.com
201 EAST PINE STREET, SUITE 1000
ORLANDO, FLORIDA 32801
PHONE: (407) 839-3955 FAX: (407) 839-3790

BID SET

MARK	DATE	DESCRIPTION	BY

Client: ORANGE COUNTY UTILITIES
Proj. Loc.: ORANGE COUNTY, FL

WESTERN REGIONAL WATER SUPPLY FACILITY
IMPROVEMENTS PHASE 3B

CIVIL DETAILS

Project No.: 200-158870-16001
Designed By:
Drawn By:
Checked By:

C503

Copyright: Tetra Tech

Wednesday, August 22, 2018 10:20:18 AM DRAWING: \\TTS181FS1\Projects\IER\158870\200-158870-16001\CAD\SheetFiles\C500-DETAILS .DWG LAYOUT: C503 USER NAME: EVANS, JON

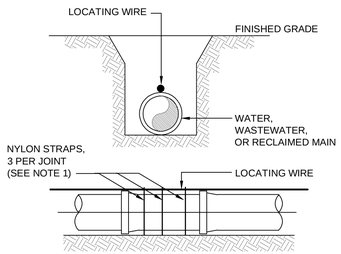

NOTES:

1. ALL PIPE SHALL REQUIRE INSULATED LOCATING WIRE (10 GAUGE SOLID COPPER) CAPABLE OF DETECTION BY A CABLE LOCATOR AND SHALL BE WRAPPED WITH NYLON STRAPS TO TOP CENTERLINE OF THE PIPE.
2. LOCATING WIRE SHALL BE CONTINUOUS INSIDE VALVE BOXES AND SHALL EXTEND 12" ABOVE TOP OF COLLAR.
3. WIRE INSULATION SHALL BE COLOR CODED FOR THE TYPE OF PIPE BEING INSTALLED.

PIPE LOCATING WIRE

ORANGE COUNTY UTILITIES STANDARDS AND CONSTRUCTION SPECIFICATIONS MANUAL
DATE: February 11, 2011

DETAIL 1 -
SCALE: NTS

FIGURE A114

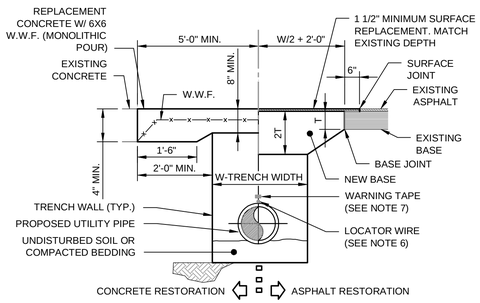

TYPICAL SECTION

NOTES:

1. SURFACE AND BASE CUTS SHALL BE SAW-CUT.
2. LONGITUDINAL OR DIAGONAL CUTS REQUIRE OVERLAY/RESURFACING COMPLETE WIDTH OF ROAD.
3. CUTS AT INTERSECTIONS REQUIRE COMPLETE OVERLAY/RESURFACING TO END OF ALL RETURN RADS AND/OR 10'FT. BEYOND CUT, WHICH EVER IS GREATER.
4. CUTS THROUGH TURNOUTS AND CUL-DE-SACS REQUIRE COMPLETE OVERLAY/ RESURFACING.
5. COMPACTION OF FINAL BACKFILL SHALL BE 98% OF AASHTO T-180; COMPACTION AROUND PIPE SHALL BE 95%, EXCEPT AS OTHERWISE REQUIRED BY PERMITTING AUTHORITY.
6. TAPE CONTINUOUS BLUE COATED 14 GAUGE UF SOLID (FOR WATER) AND GREEN 12 GAUGE STRANDED (FOR SEWER) INSULATED COPPER WIRE, BELOW THE SPRING LINE OF THE PIPE. TERMINATE THESE LOCATOR WIRES AT TOP OF EACH VALVE PAD AND HYDRANT W/12" EXTRA WIRE. JOINT SEAL MUST BE KEARNEY AQUASEAL, BISHOP OR APPROVED EQUAL.
7. PLACE PRINTED WARNING TAPE 24" ABOVE PIPE.

OPEN CUT DETAIL

DETAIL 3 -
SCALE: NTS

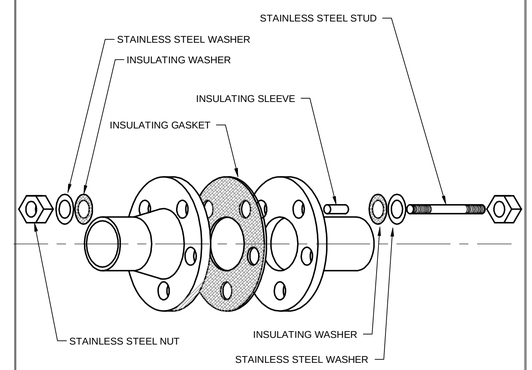

DIELECTRIC INSULATING FLANGE KIT

DETAIL 5 -
SCALE: NTS

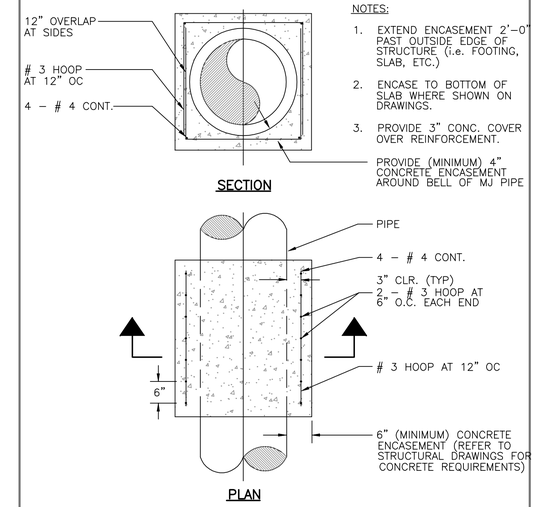

NOTES:

1. EXTEND ENCASEMENT 2'-0" PAST OUTSIDE EDGE OF STRUCTURE (i.e. FOOTING, SLAB, ETC.)
2. ENCASE TO BOTTOM OF SLAB WHERE SHOWN ON DRAWINGS.
3. PROVIDE 3" CONC. COVER OVER REINFORCEMENT.

CONCRETE ENCASEMENT

DETAIL 7 -
SCALE: NTS

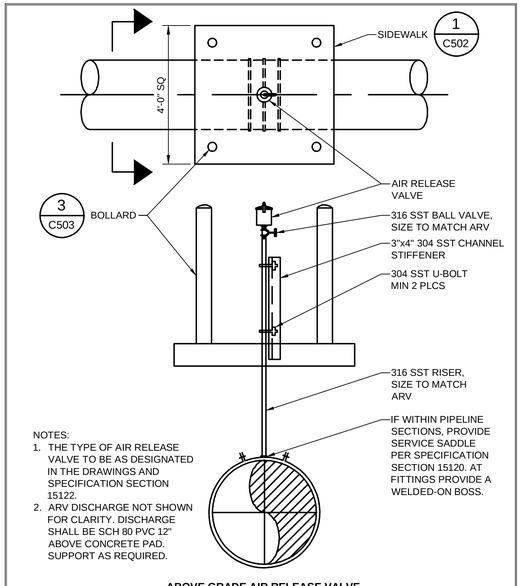

NOTES:

1. THE TYPE OF AIR RELEASE VALVE TO BE AS DESIGNATED IN THE DRAWINGS AND SPECIFICATION SECTION 15122.
2. ARV DISCHARGE NOT SHOWN FOR CLARITY. DISCHARGE SHALL BE SCH 80 PVC 12" ABOVE CONCRETE PAD. SUPPORT AS REQUIRED.

ABOVE GRADE AIR RELEASE VALVE

DETAIL 2 -
SCALE: NTS

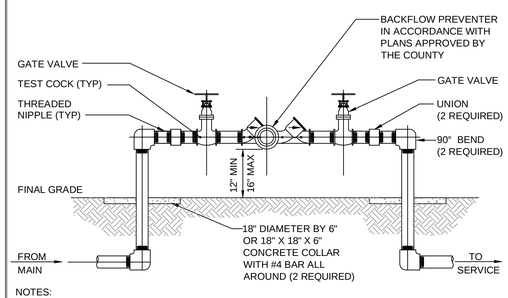

NOTES:

1. ALL PIPE AND FITTINGS SHALL BE LEAD-FREE BRASS.
2. PAINTING IN ACCORDANCE WITH THIS MANUAL.

REDUCED PRESSURE BACKFLOW PREVENTER

ORANGE COUNTY UTILITIES STANDARDS AND CONSTRUCTION SPECIFICATIONS MANUAL
DATE: April 15, 2007

DETAIL 4 -
SCALE: NTS

FIGURE A206

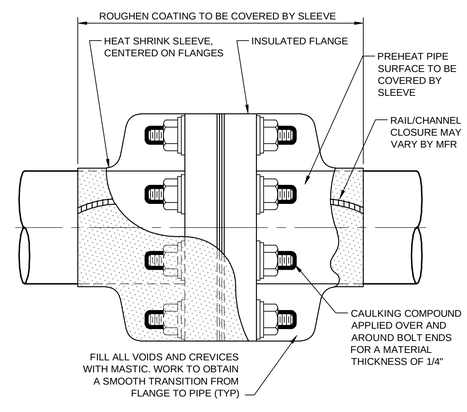

NOTES:

1. HEAT SHRINK MATERIAL SHALL BE "CASEAL" AS MANUFACTURED BY RAYCHEM, OR EQUAL.
2. THIS DETAIL TYPICAL ALL BURIED INSULATED FLANGES.

INSTALLATION OF HEAT SHRINKABLE SLEEVE ON BURIED INSULATING FLANGE

DETAIL 6 -
SCALE: NTS

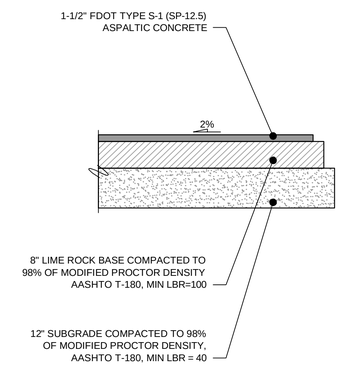

PAVEMENT

DETAIL 8 -
SCALE: NTS

TETRA TECH
www.tetratech.com
201 EAST PINE STREET, SUITE 1000
ORLANDO, FLORIDA 32801
PHONE: (407) 839-3955 FAX: (407) 839-3790

BID SET

MARK	DATE	DESCRIPTION	BY

Client: ORANGE COUNTY UTILITIES
Proj. Loc.: ORANGE COUNTY, FL
WESTERN REGIONAL WATER SUPPLY FACILITY IMPROVEMENTS PHASE 3B

CIVIL DETAILS

Project No.: 200-158870-16001
Designed By:
Drawn By:
Checked By:

C504

Copyright: Tetra Tech

Thursday, August 23, 2018 9:01:10 AM DRAWING: \\TTS181FS1\Projects\ER\158870\200-158870-16001\CAD\SheetFiles\C500-DETAILS .DWG LAYOUT: C504 USER NAME: EVANS, JON

GENERAL STRUCTURAL NOTES

GENERAL CONDITIONS

1. ALL STRUCTURAL DRAWINGS SHALL BE USED IN CONJUNCTION WITH THE MECHANICAL, CIVIL, ARCHITECTURAL, ELECTRICAL, HVAC, PLUMBING AND SHOP DRAWINGS AND SPECIFICATIONS.
2. THE CONTRACTOR SHALL REVIEW AND VERIFY DIMENSIONS SHOWN IN ALL PLANS AND REVIEW ALL FIELD CONDITIONS THAT MAY AFFECT THE WORK DEPICTED ON THE DRAWINGS. SHOULD DISCREPANCIES APPEAR, THE CONTRACTOR SHALL NOTIFY THE ENGINEER IN WRITING TO OBTAIN ENGINEER'S CLARIFICATION BEFORE COMMENCING WITH THE WORK.
3. FOR ALL ITEMS EMBEDDED IN OR PASSING THROUGH CONCRETE, THE CONTRACTOR SHALL INITIALLY REFER TO MECHANICAL, HVAC, AND PLUMBING DRAWINGS FOR TYPE, SIZE, LOCATION, AND SPECIAL INSTALLATION REQUIREMENTS FOR THESE ITEMS.
4. THE CONTRACTOR SHALL TAKE ALL NECESSARY MEASURES TO PROTECT EXISTING STRUCTURES FROM DAMAGE WHEN WORKING IN AND AROUND EXISTING STRUCTURES PERFORMING WORK SUCH AS DEMOLITION, FOUNDATION EXCAVATIONS, AND OTHERS.
5. SIZE AND LOCATION OF EQUIPMENT PADS AND ANCHOR BOLTS SHALL BE PER EQUIPMENT MANUFACTURER'S REQUIREMENTS.
6. ANY CONSTRUCTION EQUIPMENT THAT MAY INDUCE VIBRATION TO THE STRUCTURE SHALL BE ADEQUATELY ISOLATED FROM THE STRUCTURE.
7. ALL DETAILS AND SECTIONS SHOWN ON THE DRAWINGS ARE INTENDED TO BE TYPICAL AND SHALL BE CONSTRUED TO APPLY TO ANY SIMILAR SITUATION ELSEWHERE ON THE PROJECT, EXCEPT WHERE A DIFFERENT DETAIL IS SHOWN.
8. STANDARD DETAILS APPLY TO ALL SIMILAR SITUATIONS ON THE PROJECT EXCEPT WHERE A DIFFERENT DETAIL IS SHOWN.

DESIGN CRITERIA

BUILDING CODES AND REFERENCES:

1. FLORIDA BUILDING CODE 6TH EDITION (2017)
2. REINFORCED CONCRETE: ACI 318-11 "BUILDING CODE REQUIREMENTS FOR STRUCTURAL CONCRETE"
3. MASONRY: TMS 402-11/ACI 530-11/ASCE 5-11 "BUILDING CODE REQUIREMENTS FOR MASONRY STRUCTURES.
4. STRUCTURAL STEEL: AISC MANUAL OF STEEL CONSTRUCTION 14TH EDITION
5. LIVE LOADS:

   -BUILDINGS:

   ROOF 20 PSF
   SLABS 150 PSF
6. WIND DESIGN CRITERIA:

   RISK CATEGORY III
   ULTIMATE DESIGN WIND SPEED, V_{ULT} 145 MPH
   NOMINAL DESIGN WIND SPEED, V_{ASD} 113 MPH
   EXPOSURE CATEGORY C

FOUNDATIONS

FOUNDATION DESIGN:

1. ALLOWABLE BEARING PRESSURE FOR FOOTINGS ASSUMED FOR DESIGN: 1,500 PSF

CONCRETE (CAST-IN-PLACE)

1. ALL MATERIALS AND METHODS OF CONSTRUCTION SHALL BE IN ACCORDANCE WITH ACI 318 REQUIREMENTS.
2. ALL CONCRETE SHALL BE AIR-ENTRANED WITH A MINIMUM OF 4,000 PSI COMPRESSIVE STRENGTH AT 28 DAYS UNLESS OTHERWISE NOTED.
3. WATER REDUCING AGENT SHALL BE IN ACCORDANCE WITH ASTM C494.
4. ALL CONCRETE SURFACES EXPOSED TO AIR, UNLESS OTHERWISE NOTED IN THE SPECIFICATIONS, SHALL BE TREATED WITH AN APPROPRIATE CURING COMPOUND AS SOON AS FINISHING IS COMPLETED OR FORMS ARE REMOVED.
5. ALL EXPOSED CORNERS SHALL HAVE A MINIMUM CHAMFER OF 3/4" UNLESS OTHERWISE NOTED.
6. THE CONTRACTOR SHALL OBTAIN ENGINEER'S APPROVAL FOR THE LOCATIONS OF CONSTRUCTION JOINTS THAT ARE NOT SHOWN ON THE DRAWINGS.

REINFORCING STEEL

1. REINFORCEMENT SHALL CONFORM TO ASTM A615, GRADE 60 REQUIREMENTS. WELDED WIRE FABRIC SHALL CONFORM TO ASTM A315 REQUIREMENTS. ALL ACCESSORIES SHALL BE IN CONFORMANCE WITH ACI 315 REQUIREMENTS.
2. REINFORCING STEEL SHALL HAVE THE FOLLOWING CLEAR COVER UNLESS OTHERWISE NOTED:
   a. CONCRETE CAST AGAINST EARTH 3"
   b. FORMED SURFACE IN CONTACT WITH SOIL, SEWAGE, WATER OR EXPOSED TO WEATHER 2"
   c. FORMED SURFACES NOT EXPOSED TO WEATHER OR IN CONTACT WITH SOIL:

      SLABS, WALLS AND JOIST 3/4"

      BEAMS AND COLUMNS 1 1/2"
3. LAP SPLICES SHALL BE AS SHOWN ON THE DRAWINGS. FOR LAP SPLICES NOT SHOWN ON THE DRAWINGS, THE CONTRACTOR SHALL OBTAIN ENGINEERS APPROVAL.
4. THE CONTRACTOR SHALL PREPARE PLACING DRAWINGS AND SCHEDULES IN CONFORMANCE WITH ACI 315 REQUIREMENTS.
5. UNLESS OTHERWISE NOTED, THE MINIMUM REINFORCING FOR WALLS AND SLABS SHALL BE AS FOLLOWS.

MINIMUM REINFORCING						
THICKNESS	6"	8"	10"	12" - 16"	18" - 22"	24"
REINF. EACH WAY	#4 @ 12"	#5 @12"	#5 @ 12"	#5 @ 12"	#6 @ 12"	#7 @ 12"
LOCATION	CTR	CTR	EF	EF	EF	EF

MASONRY

1. MASONRY DESIGN COMPRESSIVE STRENGTH AT 28 DAYS, f'_M = 1500 PSI MINIMUM.
2. MATERIALS:
   a. BLOCK : CONFORM TO ASTM C90 - LOAD BEARING, NORMAL WEIGHT TWO-CELL, 8"x8"x16".
   b. MORTAR : CONFORM TO ASTM C270, TYPE S, MINIMUM COMPRESSIVE STRENGTH AT 28 DAYS SHALL BE 1800 PSI. UTILIZE TYPE II CEMENT AND TYPE S LIME, MASONRY CEMENT WILL NOT BE CONSIDERED.
   c. GROUT : CONFORM TO ASTM C476, COURSE GROUT, MINIMUM COMPRESSIVE STRENGTH AT 28 DAYS SHALL BE 2500 PSI.
   d. STEEL : BOND BEAM AND FILLED CELL REINFORCEMENT AS NOTED ON DRAWINGS (ASTM A615, GRADE 60).
3. CONSTRUCTION:
   a. THE GROUT FOR FILLED CELLS SHALL BE RODDED OR PUDDLED DURING PLACEMENT TO INSURE COMPLETE FILLING TO THE BLOCK CORE.
   b. PROVIDE CLEAN OUT AND INSPECTION BLOCK OUT IN CELLS CONTAINING REINFORCEMENT FOR GROUT LIFTS EXCEEDING 5'-0".

STRUCTURAL STEEL

1. DESIGN, FABRICATION, ERECTION MATERIALS AND WORKMANSHIP SHALL BE IN ACCORDANCE WITH THE LATEST AISC SPECIFICATIONS AND THE DESIGN DRAWINGS.
2. STEEL MATERIAL:
   a. W-SHAPED SECTIONS : ASTM A992, GRADE 50
   b. HOLLOW STRUCTURAL SECTIONS: ASTM A500, GRADE B
   c. ALL OTHER STRUCTURAL STEEL: ASTM A36
   d. ALL PIPE: ASTM A53, GRADE B
3. WELDED CONNECTIONS SHALL BE IN ACCORDANCE WITH THE LATEST AWS STRUCTURAL WELDING CODE REQUIREMENTS. ELECTRODES SHALL BE E-70XX.
4. BOLTED CONNECTIONS:
   a. MAIN CONNECTIONS: 3/4" DIA, ASTM A325 BOLTS. HOLES: 13/16" DIA CONNECTION SHALL BE "BEARING" TYPE WITH THREADS EXCLUDED FROM THE SHEAR PLANE. ALL BOLTS SHALL BE INSTALLED TO A SNUG-TIGHT CONDITION, UNO.
   b. ALL CONNECTION SHALL HAVE A MINIMUM OF TWO BOLTS. GUSSET PLATES SHALL BE A MINIMUM OF 3/8" THICK.
   c. ALL COLUMNS AND POSTS SHALL HAVE MILLED ENDS FOR FULL BEARING AT BASE PLATES.

WELL HOUSE BUILDING

WIND DESIGN PRESSURES COMPONENTS CLADDING, PSF (LFRD)

ROOF

EFFECTIVE AREA (SF)	ZONE 1		ZONE 2		ZONE 3	
	(+)	(-)	(+)	-73	(+)	(-)
10	27	-42	27	-66	27	-108
25	24	-41	24	-54	24	-99
50	21	-40	21	85	21	-92
> 100	19	40	19	-73	19	-85

WALLS

EFFECTIVE AREA (SF)	ZONE 4 (FIELD)		ZONE 5 (CORNERS)	
	(+)	(-)	(+)	(-)
<10	46	-50	46	-62
50	41	-45	41	-52
200	37	-41	37	-44
>500	34	-38	34	-38

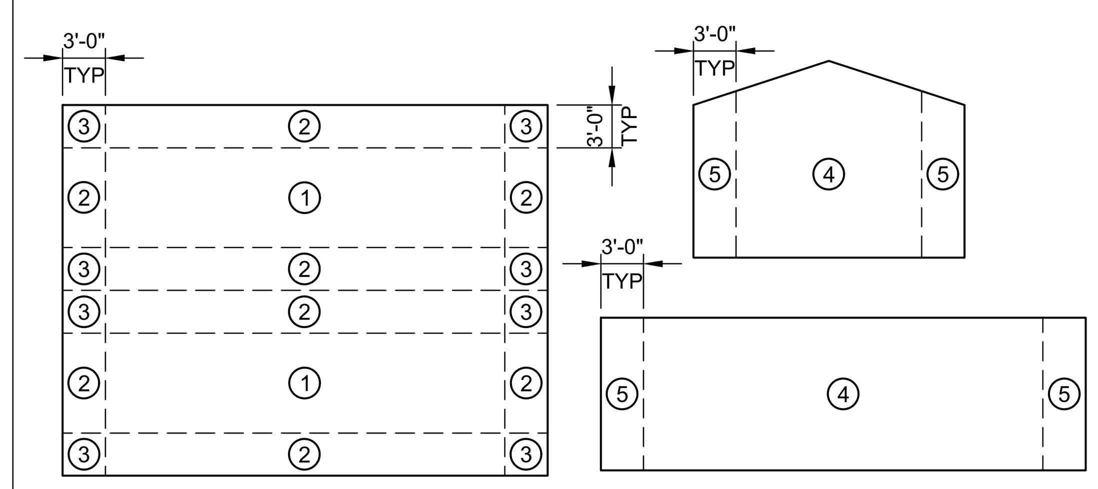

ROOF ZONE
PLAN

WALL ZONE
ELEVATIONS

WIND PRESSURE NOTES:

1. SEE "DESIGN CRITERIA" THIS SHEET FOR WIND DESIGN CRITERIA.
2. DESIGN PRESSURES ARE PROVIDED AT ULTIMATE DESIGN WIND SPEEDS. TO CONVERT TO NOMINAL DESIGN WIND SPEEDS (ASD) MULTIPLE PRESSURE BY A FACTOR OR 0.60.
3. THE EFFECTIVE AREA SHALL BE DETERMINED AS FOLLOWS UNLESS OTHERWISE NOTED:
   a. THE SPAN LENGTH MULTIPLIED BY AN EFFECTIVE WIDTH THAT NEED NOT BE LESS THAN ONE THIRD THE SPAN LENGTH.
   b. THE AREA THAT IS TRIBUTARY TO AN INDIVIDUAL FASTENER.
4. NEGATIVE SIGN INDICATES PRESSURE ACTING OUTWARD FROM SURFACE.

STRUCTURAL ABBREVIATIONS

&	AND
@	AT
#	NUMBER
ADDTL	ADDITIONAL
ALUM	ALUMINUM
AEWS	AUTOMATIC END WELDED STUD(S)
ALT	ALTERNATE
APROX	APPROXIMATE(LY)
BLD	BUILDING
BM	BEAM
BOT	BOTTOM
CJ	CONTROL JOINT
CL	CENTER LINE
CLR	CLEAR
CMU	CONCRETE MASONRY UNIT
COL	COLUMN
CONC	CONCRETE
CONN	CONNECTION
CONST JT	CONSTRUCTION JOINT
CONT	CONTINUOUS
DIA	DIAMETER
DIM	DIMENSION
DEG	DEGREE(S)
DO	DITTO
DWG	DRAWING
DWL	DOWEL(S)
(E)	EXISTING
EA	EACH
EF	EACH FACE
EJ	EXPANSION JOINT
EL	ELEVATION
ELEC	ELECTRICAL
EMBED	EMBEDMENT
EQ	EQUAL
EW	EACH WAY
EXIST	EXISTING
EXP	EXPANSION
FE	FIRE EXTINGUISHER
FF	FAR FACE, FINISHED FLOOR
FG	FINISHED GRADE
FRP	FIBER REINFORCED PLASTIC
FT	FOOT
FTG	FOOTING
FV	FIELD VERIFY
GA	GAGE
GALV	GALVANIZED
HK	HOOK
HORIZ	HORIZONTAL
HSS	HOLLOW STRUCTURAL SECTION
HP	HIGH POINT
ID	INSIDE DIAMETER
JT	JOINT
LB(S)	POUND(S)
LONG	LONGITUDINAL
LP	LOW POINT
MANUF	MANUFACTURER
MATL	MATERIAL
MAX	MAXIMUM
MECH	MECHANICAL
MFR	MANUFACTURER
MIN	MINIMUM
MISC	MISCELLANEOUS
MO	MASONRY OPENING
MTL	METAL
NO	NUMBER
NTS	NOT TO SCALE
OC	ON CENTER
OD	OUTSIDE DIAMETER
OH	OPPOSITE HAND
OPNG	OPENING
PCS	PIECES
PEMB	PRE-ENGINEERED METAL BUILDING
PERP	PERPENDICULAR
PL	PLATE
PLF	POUND PER LINEAR FOOT
PT	PRESSURE TREATED
PROJ	PROJECTION
PSF	POUNDS PER SQUARE FOOT
PSI	POUNDS PER SQUARE INCH
PVC	POLYVINYL CHLORIDE
R	RADIUS
REINF	REINFORCING
REQD	REQUIRED
RO	ROUGH OPENING
SCHED	SCHEDULE(D)
SIM	SIMILAR
SJ	SAWCUT JOINT
SMS	SHEET METAL SCREW
SPECS	SPECIFICATIONS
SQ	SQUARE
SS	STAINLESS STEEL
STD	STANDARD
STL	STEEL
T/	TOP OF
TB	TIE BEAM
T&B	TOP AND BOTTOM
THK	THICK
THRU	THROUGH
TOC	TOP OF CONCRETE
TOS	TOP OF STEEL
TYP	TYPICAL
UNO	UNLESS NOTED OTHERWISE
VERT	VERTICAL
WT	WEIGHT
WWF	WELDED WIRE FABRIC

LEGEND

STRUCTURAL LEGEND APPLIES TO "S" SHEETS ONLY

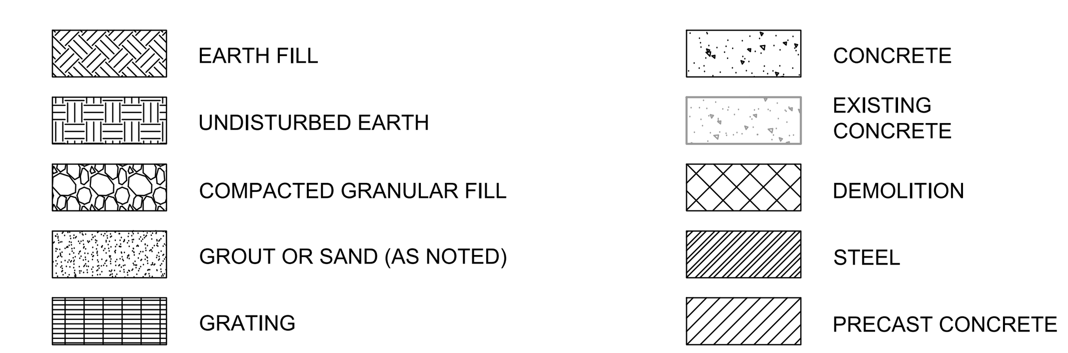

SYMBOLS

SYMBOLS APPLY TO "S" SHEETS ONLY

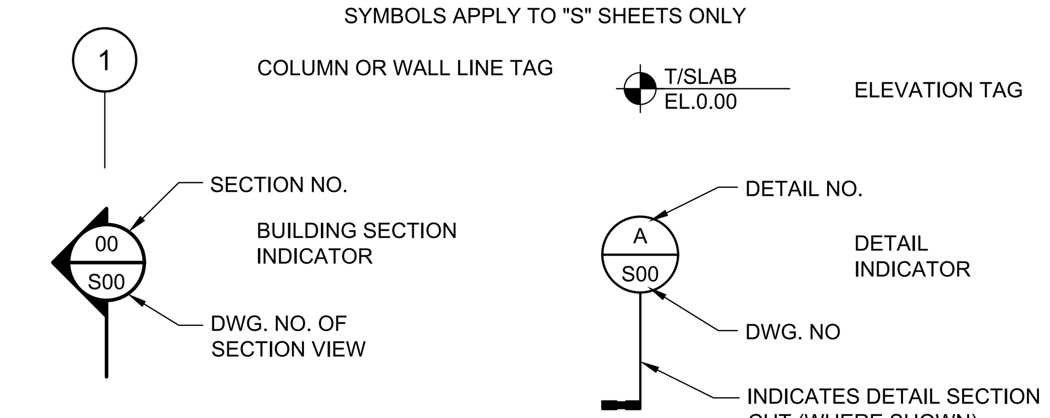

TETRA TECH
www.tetratech.com
201 EAST PINE STREET, SUITE 1000
ORLANDO, FLORIDA 32801
PHONE: (407) 839-3955 FAX: (407) 839-3790

WEKIVA ENGINEERING
WEKIVA ENGINEERING, LLC
711 N ORANGE AVE, STE A, WINTER PARK, FL 32789
P: 321.972.4989 | FL COA NO. 31920

BID SET

MARK	DATE	DESCRIPTION	BY

Client: ORANGE COUNTY UTILITIES
Proj. Loc.: ORANGE COUNTY, FL

WESTERN REGIONAL WATER SUPPLY FACILITY IMPROVEMENTS PHASE 3B

GENERAL NOTES & ABBREVIATIONS LEGEND AND SYMBOLS

Project No.:	200-158870-16001
Designed By:	JVS
Drawn By:	DSM
Checked By:	JVS

S001

Copyright: Tetra Tech

Monday, August 20, 2018 10:04:24 AM DRAWING: \\WEKIVADROBO\Projects\Tetra Tech\17-244 Western Regional WSF Phase 3B\Drawings\S-001.DWG LAYOUT: S001 USER NAME: JOHN

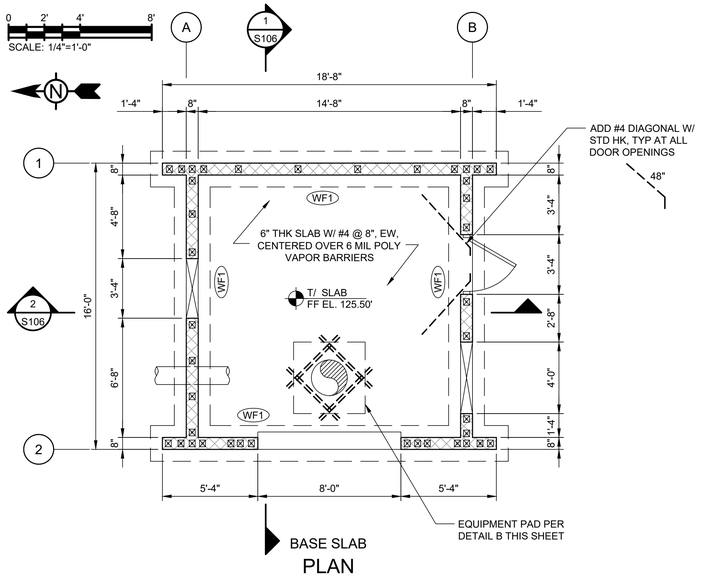

BASE SLAB
PLAN
1/4" = 1'-0"

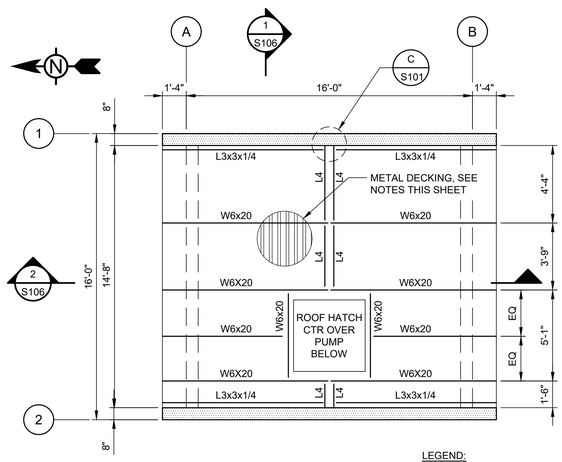

ROOF FRAMING
PLAN
1/4" = 1'-0"

LEGEND:

INDICATES TOP OF PARAPET (14'-8" AFF)

INDICATES WALL BELOW

L4= L4x4x1/4

NOTES:

1. COORDINATE ALL OPENINGS IN MASONRY WITH ALL OTHER DISCIPLINES.
2. ALL STEEL AND HARDWARE SHALL BE HOT-DIPPED GALVANIZED.

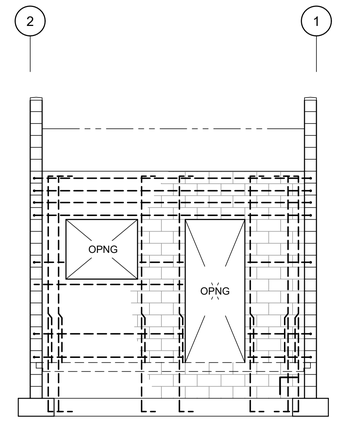

SOUTH STRUCTURAL ELEVATION
1/4" = 1'-0"

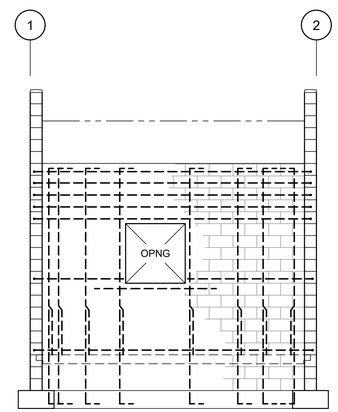

NORTH STRUCTURAL ELEVATION
1/4" = 1'-0"

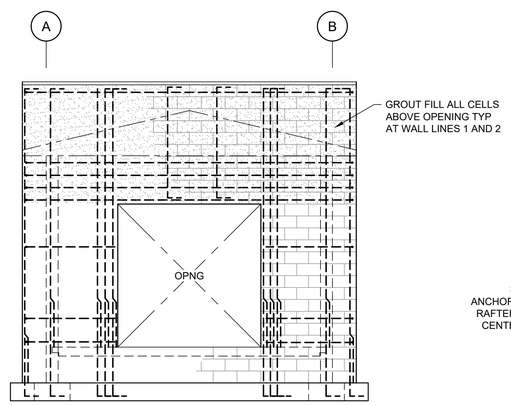

WEST STRUCTURAL ELEVATION
1/4" = 1'-0"

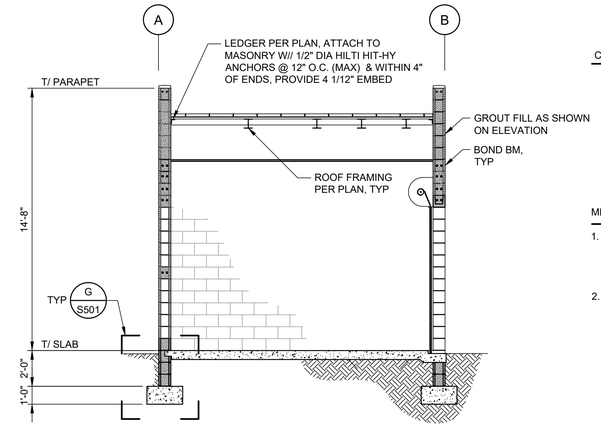

1 S101 SECTION
SCALE: NTS

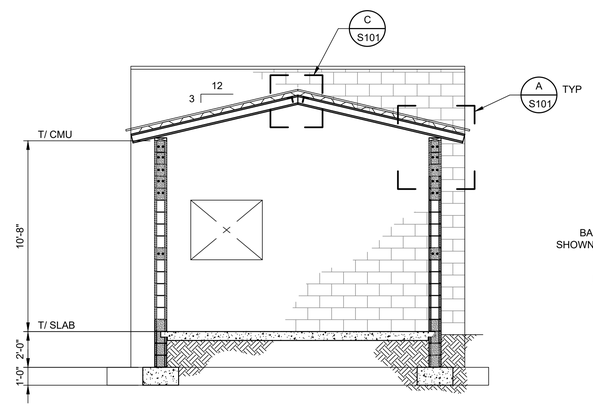

2 S101 SECTION
SCALE: NTS

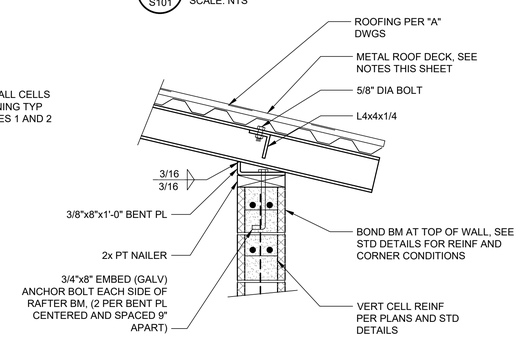

A S101 RAFTER TO WALL CONNECTION
SCALE: NTS

CMU WALL REINFORCEMENT

DENOTES FILLED CELL. PROVIDE FILLED CELLS AT ALL CORNERS, OPENINGS PER STANDARD DETAILS AND WHERE SHOWN ON PLAN.

8" CMU WALL FILLED CELL REINFORCING TO BE (1) - #5 VERT BAR, CTR. MAXIMUM 32" OC., MIN LAP LENGTH: 30", UNO.

PROVIDE HORIZONTAL BOND BEAMS AT A SPACING NO GREATER THAN 48" O.C AND WHERE SHOWN ON DRAWINGS.

METAL ROOF DECK NOTES:

1. METAL ROOF DECK SHALL BE GALV. 1-1/2" TYPE B WIDE RIB, GALVANIZED (G90) COATING. DECK FASTENERS AT SUPPORTS AND EXTERIOR EDGES SHALL BE #12 TEK SCREW FASTENED AT 36/4 PATTERN. SIDE LAPS SHALL BE FASTENED WITH #12 TEK SCREWS - 4 PER SPAN.
2. METAL DECKING PANELS SHALL SPAN CONTINUOUS OVER 2 FRAMING MEMBERS MINIMUM.

METAL DECK PROPERTIES PER FOOT OF WIDTH:

DEPTH: 1-1/2"	
MIN GAGE:	20 GA (GALV)
MIN Ix:	0.201 IN^4 (+), 0.222 IN^4 (-)
MIN Sx:	0.234 IN^3 (+), 0.247 IN^3(-)
MIN Fy:	33,000 PSI

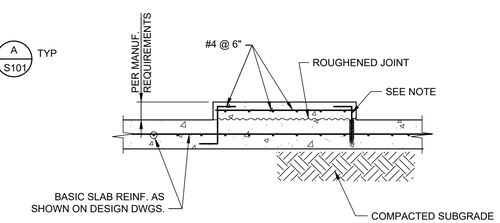

NOTE: FOR EXISTING CONCRETE SLAB DRILL AND EPOXY #5 @ 12" AROUND PERIMETER. EMBED 6" MIN.

B S101 EQUIPMENT PAD DETAIL
SCALE: NTS

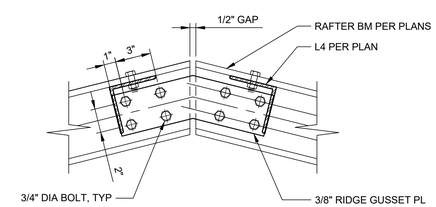

C S101 RIDGE CONNECTION
SCALE: NTS

TETRA TECH
www.tetratech.com
201 EAST PINE STREET, SUITE 1000
ORLANDO, FLORIDA 32801
PHONE: (407) 839-0855 FAX: (407) 839-0780

WEKIVA ENGINEERING
WEKIVA ENGINEERING, LLC
711 N ORANGE AVE, STE A, WINTER PARK, FL 32789
P: 321 972-9669 | FL COA NO. 31920

BID SET

MARK	DATE	DESCRIPTION	BY

Client: ORANGE COUNTY UTILITIES
Proj. Loc.: ORANGE COUNTY, FL

WESTERN REGIONAL WATER SUPPLY FACILITY
IMPROVEMENTS PHASE 3B
WELL HOUSE PLANS
SECTIONS, ELEVATIONS & DETAILS

Project No.:	200-158870-16001
Designed By:	JVS
Drawn By:	DSM
Checked By:	JVS

S101

Copyright: Tetra Tech

Monday, August 20, 2018 10:04:35 AM DRAWING: \\WEKIVADROBO\Projects\Tetra Tech\17-244 Western Regional WSF Phase 3B\Drawings\S-101.DWG LAYOUT: S101 USER NAME: JOHN

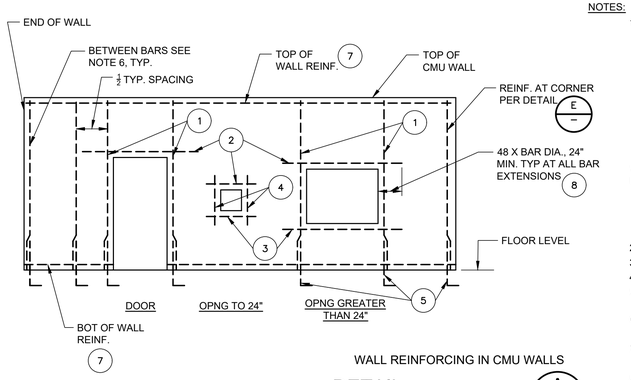

WALL REINFORCING IN CMU WALLS

DETAIL A
NTS

NOTES:

1. VERTICAL REINFORCEMENT AT OPENINGS:

OPNG \ CMU	8"	
	D	REINF
TO 4'-3"	8"	1#5 CTR
4'-4" TO 6'-3"	16	1#5 CTR
6-4" TO 12'-0"	24"	1#5 CTR

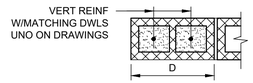

2. FOR LINTEL BARS SEE DETAIL C & D/-.
3. SILL BARS, 2-#5 IN BOND BEAM
4. 1-#5 EACH SIDE
5. DOWEL SIZE & QTY TO MATCH BARS BESIDE OPNG. SEE DETAIL B/- FOR DOWEL
6. BETWEEN BARS AT CORNERS & OPNGS, PROVIDE TYP WALL REINF PER DETAIL B/-
7. TOP AND BOTTOM OF WALL COURSE, UNO ON DWGS. PROVIDE 2-#5 IN BOND BEAM.
8. IF FULL LENGTH IS NOT AVAILABLE, PROVIDE STD HOOK AND EXTEND AS FAR AS POSSIBLE.

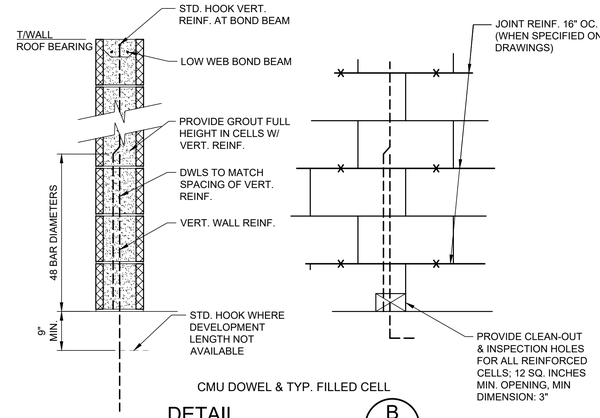

CMU DOWEL & TYP. FILLED CELL

DETAIL B
NTS

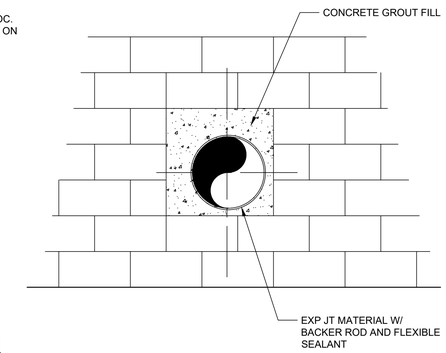

TYPICAL PIPE PENETRATION THROUGH CMU WALL

DETAIL B1
NTS

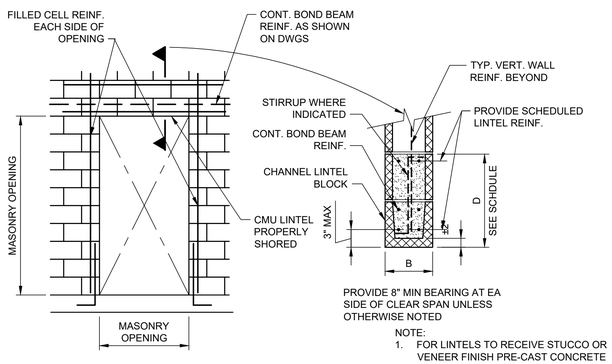

NOTE:
1. FOR LINTELS TO RECEIVE STUCCO OR VENEER FINISH PRE-CAST CONCRETE LINTEL MAY BE USED.

LINTEL WITHOUT STUCCO FINISH

DETAIL C
NTS

SPAN \ MARK	B	D	REINF	STIRRUPS
TO 4'-3"	8"	8"	1-#5 BOT	-
				-
4'-4" TO 6'-3"	8"	16"	2-#5 BOT	-
6'-4" TO 12-0"	8"	24"	2-#5 T&B	-

NOTES:
1. PROVIDE REINF AS INDICATED AT ALL OPENINGS BOTH INTERIOR & EXTERIOR WALLS
2. PROVIDE 8" MINIMUM BEARING AT EACH SIDE OF CLEAR SPAN.
3. FULLY GROUT CMU OVER DEPTH "D" TO ENDS OF BEARING.
4. D OF 16" MAY CONSIST OF ONE FULLY GROUTED 16" CMU LINTEL BLOCK OR ONE FULLY GROUTED 8" CMU LINTEL BLOCK PLUS ONE FULLY GROUTED 8" CMU.

CMU LINTEL REINFORCING SCHEDULE

DETAIL D
NTS

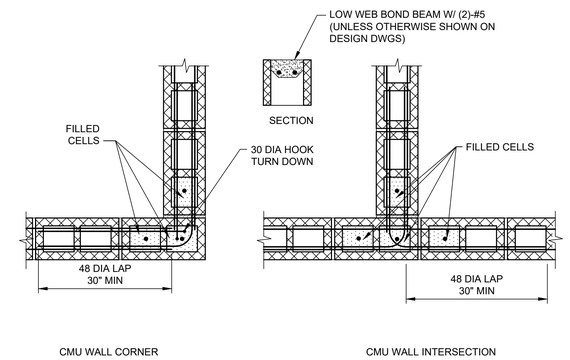

CMU BOND BEAM REINFORCING

DETAIL E
NTS

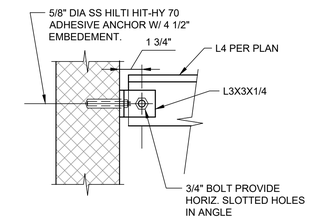

L4 TO MASONRY CONNECTION

DETAIL F
NTS

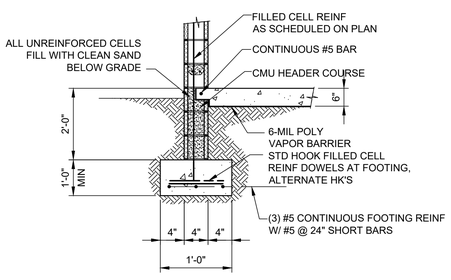

WALL FOOTING F1

DETAIL G
NTS

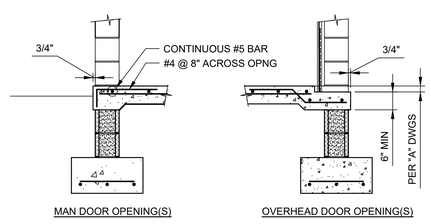

NOTE: SEE DETAIL G THIS SHEET FOR ITEMS SHOWN BUT NOT SPECIFIED.

FLOOR SLAB AT OPENING(S)

DETAIL H
NTS

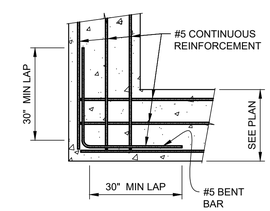

NOTE:
FOOTING CONTINUOUS REINFORCEMENT LAPS TO BE MIN 2'-7"

TYPICAL FOOTING DETAIL AT BUILDING CORNERS

DETAIL I
NTS

NOTES:

1. NUMBER OF ROWS IS EQUAL TO NUMBER OF BOLTS TO ENCLOSE WEB.
2. ALL FRAMING CONNECTIONS SHALL CONFORM TO SCHEDULE UNLESS DETAILED OTHERWISE ON FRAMING DRAWINGS.
3. ADD 1 $\frac{1}{2}$" TO ANGLE LENGTH FOR STAGGERED BOLT CONNECTIONS.
4. USE WASHERS ON NUTS.

NOMINAL BEAM DEPTH, INCHES	ROWS OF BOLTS	LENGTH (3) OF ANGLE
8-10	2	5 1/2"
6	1	3"

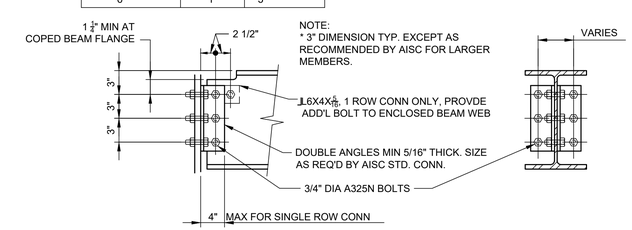

TYPICAL FRAMING CONNECTION

DETAIL J
NTS

TETRA TECH
www.tetratech.com
201 EAST PINE STREET, SUITE 1000
ORLANDO, FLORIDA 32801
PHONE: (407) 839-0855 FAX: (407) 839-0780

WEKIVA ENGINEERING
WEKIVA ENGINEERING, LLC
711 N ORANGE AVE, STE A, WINTER PARK, FL 32789
P: 321.972.9669 | FL COA NO. 31920

BID SET

MARK	DATE	DESCRIPTION	BY

Client: ORANGE COUNTY UTILITIES
Proj. Loc.: ORANGE COUNTY, FL

WESTERN REGIONAL WATER SUPPLY FACILITY
IMPROVEMENTS PHASE 3B

STRUCTURAL DETAILS

Project No.:	200-158870-16001
Designed By:	JVS
Drawn By:	DSM
Checked By:	JVS

S501

Copyright: Tetra Tech

Monday, August 20, 2018 10:00:07 AM DRAWING: \\WEKIVADROBO\Projects\Tetra Tech\17-244 Western Regional WSF Phase 3B\Drawings\S-501.DWG LAYOUT: S501 USER NAME: JOHN

ABBREVIATIONS

AB	ANCHOR BOLTS
AC or A/C	AIR CONDITIONING
ACOUS	ACOUSTICAL
AD	ACCESS DOOR
AFF	ABOVE FINISHED FLOOR
ALUM	ALUMINUM
APPR	APPROVED
BD or BRD	BOARD
BLDG	BUILDING
BLK	BLOCK
BM	BEAM
BOB	BOTTOM OF BEAM
BOT	BOTTOM
C/C	CENTER TO CENTER
CEM	CEMENT
CER	CERAMIC
CH	CEILING HEIGHT
CJ	CONTROL JOINT
CLG or CEIL	CEILING
CLO	CLOSET
CLR	CLEAR
CMU	CONCRETE MASONRY UNIT
COL	COLUMN
COMP	COMPOSITION
CONC	CONCRETE
CONN	CONNECTION
CONT	CONTINUOUS
CORR	CORRIDOR
CSK	COUNTERSINK
DBL	DOUBLE
DF	DRINKING FOUNTAIN
DIA	DIAMETER
DIAG	DIAGONAL
DIM	DIMENSION
DN	DOWN
DO	DOOR OPENING
DR	DOOR
DS	DOWNSPOUT
DTL	DETAIL
DWG	DRAWINGS
EA	EACH
EJ	EXPANSION JOINT
ELEC	ELECTRICAL
ELEV or EL	ELEVATION
EQ	EQUAL
EQUIP	EQUIPMENT
EXIST	EXISTING
EXT	EXTERIOR
EWC	ELEC. WATER COOLER
FD	FLOOR DRAIN
FE	FIRE EXTINGUISHER
FH	FULL HEIGHT
FHC	FIRE HOSE CABINET
FIN	FINISH
FLR	FLOOR
FO	FINISHED OPENING
FOC	FACE OF CONCRETE
FOS	FACE OF STUD
FOUND	FOUNDATION
FOW	FACE OF WALL
FS	FLOOR SINK
FT	FEET
GA	GAUGE
GALV	GALVANIZE
GL	GLASS
GR	GRADE
GYP BD	GYPSUM BOARD
GWB	
HDWD	HARDWOOD
HM	HOLLOW METAL
HORIZ	HORIZONTAL
ID	INSIDE DIAMETER
INSUL	INSULATION
INT	INTERIOR
JAN	JANITOR
LAV	LAVATORY
LEV	LEVEL
LTG	LIGHTING
LT WT	LIGHT WEIGHT
MAINT	MAINTENANCE
MATL	MATERIAL
MAX	MAXIMUM
MECH	MECHANICAL
MTL	METAL
MEZZ	MEZZANINE
MFR	MANUFACTURER
MIN	MINIMUM
MISC	MISCELLANEOUS
MO	MASONRY OPENING
MT	METAL THRESHOLD
MULL	MULLION
N	NEW
NO	NUMBER
NR	NON-RATED
NTS	NOT TO SCALE
OC	ON CENTER
OD	OUTSIDE DIAMETER
OH	OPPOSITE HAND
OPNG	OPENING
OPP	OPPOSITE
PC	PORTLAND CEMENT
PL	PLATE
PLYWD	PLYWOOD
PR	PAIR
PREP	PREPARATION
PROJ	PROJECTION
QT	QUARRY TILE
R	RISER
RAD	RADIUS
RD	ROOF DRAIN
REF	REFERENCE
REFL	REFLECTED
REINF	REINFORCE
REQ'D	REQUIRED
REV	REVERSE
RM	ROOM
RO	ROUGH OPENING
SCWD	SOLID CORE WOOD DOOR
SECT	SECTION
SHT	SHEET
SIM	SIMILAR
SIMUL	SIMULATED
SPECS	SPECIFICATIONS
SQ	SQUARE
SS	STAINLESS STEEL
STD	STANDARD
STL	STEEL
STRUCT	STRUCTURAL
SUSP	SUSPENDED
SYM	SYMMETRICAL
T	TREAD
TB	TACKBOARD
T&G	TONGUE AND GROOVE
TEMP	TEMPERED
TEL	TELEPHONE
THK	THICK
TOC	TOP OF CONCRETE / CURB
TOP	TOP OF PARAPET
TOS	TOP OF STEEL
TOW	TOP OF WALL
TYP	TYPICAL
UNO	UNLESS NOTED OTHERWISE
VERT	VERTICAL
WC	WATER CLOSET
WD	WOOD
WI	WROUGHT IRON
WL	WATER LEVEL
WP	WATERPROOFING
WP	WORKING POINT

SYMBOLS

ANGLE	DIAMETER or ROUND	NUMBER or POUND	AND
CHANNEL	WORK POINT OR ELEV BENCH MARK	SQUARE	AT
PLATE		SQUARE FEET	DELTA
CENTER LINE			PENNY

MAIN-TITLE

SCALE:X'-X"

MAIN DRAWING TITLE

X / SHEET — SECTION-TITLE SCALE: X"=X'=0"

DRAWING SECTION TITLE

BUILDING ELEVATION SYMBOL

SECTION SYMBOL

DETAIL BUBBLE

ROOM TITLE TAG

DOOR NUMBER TAG

FRAME TYPE TAG

WINDOW/LOUVER TYPE TAG

WALL TYPE TAG

DOOR TYPE TAG

ELEVATION HEIGHT

CEILING TAG

INTERIOR ELEVATION SYMBOL

SPOT ELEVATION

FINISH SYMBOL

GENERAL NOTES

1. SHOWN DIMENSIONS TAKE PRECEDENCE OVER SCALED MEASUREMENTS. DO NOT SCALE DRAWINGS.
2. LARGER SCALE DRAWINGS TAKE PRECEDENCE OVER SMALLER SCALE DRAWINGS.
3. FINISH FLOOR ELEVATION 0'-0" SHOWN ON ARCHITECTURAL DRAWINGS IS EQUAL TO ACTUAL FINISH FLOOR ELEVATIONS SHOWN ON CIVIL DRAWINGS.
4. ALL ITEMS NOTED ON DRAWINGS ARE NEW AND ARE TO BE PROVIDED AND INSTALLED BY CONTRACTOR UNLESS NOTED OTHERWISE.
5. THE MANUFACTURER'S STANDARD DETAILS OR APPROVED SHOP DRAWINGS / DATA SHEETS, IN ACCORDANCE WITH THE PROJECT SPECIFICATIONS, SHALL APPLY UNLESS OTHERWISE DETAILED IN CONSTRUCTION DOCUMENTS.

DIMENSIONING

UNLESS OTHERWISE NOTED, PLAN DIMENSIONS ARE TAKEN FROM:

1.

A. X'-X" — FACE OF MASONRY UNIT TO FACE OF MASONRY UNIT.

B. X'-X" — CENTERLINE OF COLUMN TO CENTERLINE OF COLUMN.

C. X'-X" — FACE OF METAL STUD TO FACE OF METAL STUD.

WALL TYPES

WALL TYPE	INDICATION	DETAIL	DESCRIPTION	RATINGS	REMARKS
1			8" CONCRETE MASONRY UNIT		

1. EXTERIOR DECORATIVE CMU FOR PROPOSED BUILDING SHALL BE SEALED IN ACCORDANCE WITH SPECIFICATION SECTIONS 04230 AND 07100

DOOR AND FRAME TYPE

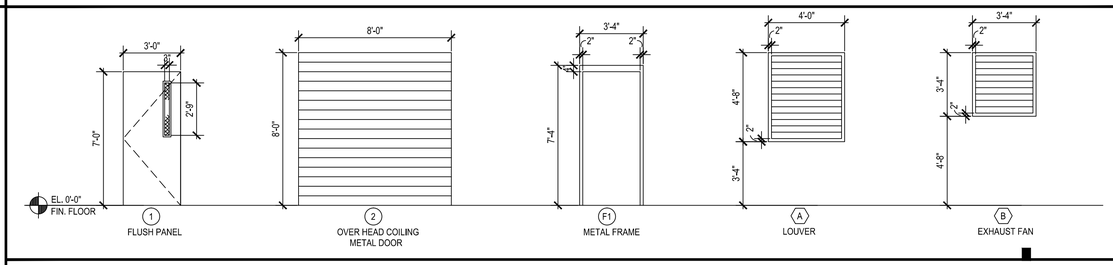

DOOR AND FRAME SCHEDULE

DOOR AND LOUVER SCHEDULE

DOOR NO.	DOOR: Size (feet - inches) Width	Height	Thick.	Door/Louver Type	Base Mat'l	Finish Mat'l	Glass Type		OPENING FRAME: Base Mat'l	Finish Mat'l		Frame Type		DETAILS: Head Detail	Jamb Detail	Sill Detail	FIRE RATING Hours	Class	HDW SET #	NOTES
BUILDING AREA	WELL HOUSE BUILDING																			
001	3'-0"	7'-0"	1 3/4"	1	STL	PNT			STL	PNT		F1		5/A501	2/A501	2/A501 SIM.	-	-	01	DOOR
001A	8'-0"	8'-0"	-	2	-	-			STL	PNT		-		4/A501	1/A501	1/A501 SIM.	-	-	-	OVERHEAD COILING DOOR
A	4'-0"	4'-8"	-	A	-	-			STL	PNT		-		6/A501	3/A501	3/A501 SIM.	-	-	-	LOUVER
B	3'-4"	3'-4"	-	B	-	-			STL	PNT		-		6/A501	3/A501	3/A501 SIM.	-	-	-	EXHAUST LOUVER

FINISH SCHEDULE

FINISH SCHEDULE

ROOM NO.	ROOM NAME	FLOOR							BASE						WALLS							CEILING						CEILING HEIGHT	NOTES
				EPOXY NOVOLAC FLOORING	CONCRETE						NONE						PAINTED CMU	EPOXY NOVOLAC (BOTTOM HALF OF WALL)						EXPOSED STRUCTURE - PAINTED	ACOUSTICAL TILE	EPOXY NOVOLAC				
WELL HOUSE																													
001	PUMP ROOM				●						●						●							●				-	Sealed Concrete Floor

TETRA TECH
www.tetratech.com
201 E. PINE STREET, SUITE 1000
ORLANDO, FL 32801
PHONE: (407)-839-3955 FAX: (407)-839-3790

BID SET

DAN-MICHAEL TRBOVICH AR96020

BORRELLI + PARTNERS
ARCHITECTURE PLANNING LANDSCAPE INTERIOR
AA26000877 IB26000877 LC26000377
720 VASSAR STREET
ORLANDO, FL 32804 (407) 418-1338

CONFIDENTIAL THE DRAWINGS THE PROPERTY OF BORRELLI + PARTNERS UNLESS OTHERWISE PROVIDED BY THE CONTRACT. THE CONTENTS OF THE DRAWING SHALL NOT BE TRANSMITTED TO ANY OTHER PERSON OR ORGANIZATION WITHOUT THE WRITTEN CONSENT OF BORRELLI + PARTNERS.

MARK	DATE	DESCRIPTION	BY

ORANGE COUNTY UTILITIES

WESTERN REGIONAL WATER SUPPLY FACILITY IMPROVEMENTS - PHASE 3B

ARCHITECTURAL GENERAL INFORMATION

Project No.:	200-158870
Designed By:	MWR
Drawn By:	DMT
Checked By:	MWR

A000

Copyright: Tetra Tech

Bar Measures 1 inch

8/30/2018 10:55:59 AM - P:\12-203 WSAI - WESTERN REGIONAL WSF - 3B\4 – DRAWINGS\A - ACTIVE DRAWINGS\1 – B+P\12.203_A000- NOTES & LEGENDS.DWG - DAN TRBOVICH

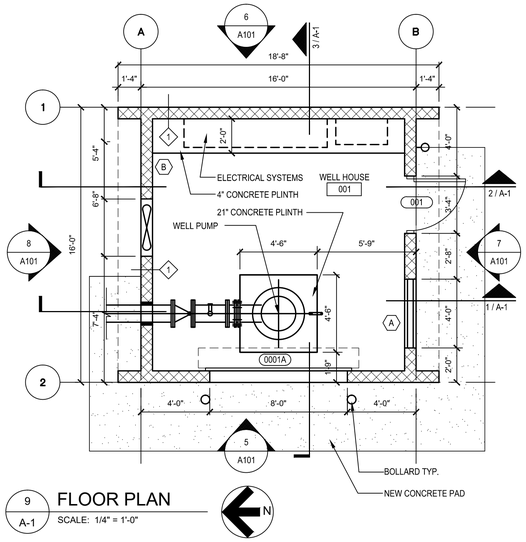

9 A-1 FLOOR PLAN
SCALE: 1/4" = 1'-0"

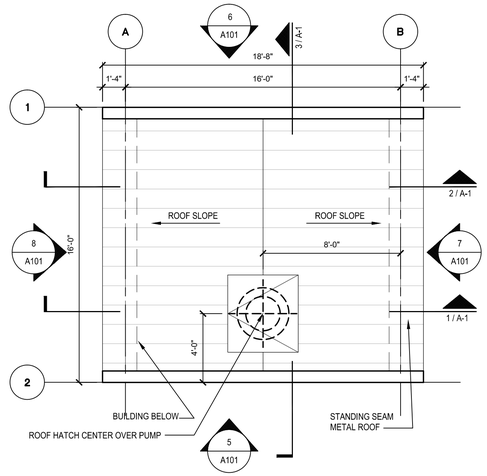

10 A-1 ROOF PLAN
SCALE: 1/4" = 1'-0"

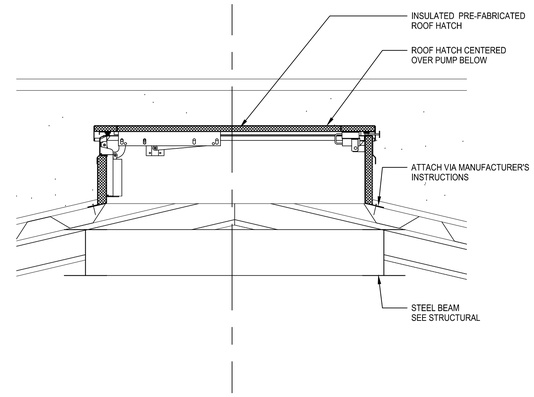

11 A-1 ROOF HATCH DETAIL
SCALE: 1" = 1'-0"

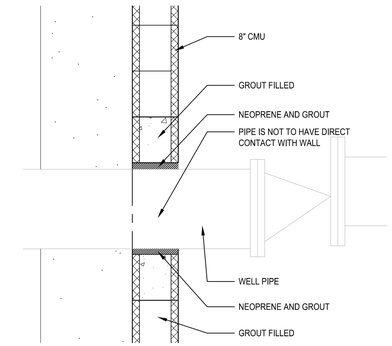

12 A-1 WELL PIPE DETAIL
SCALE: 1" = 1'-0"

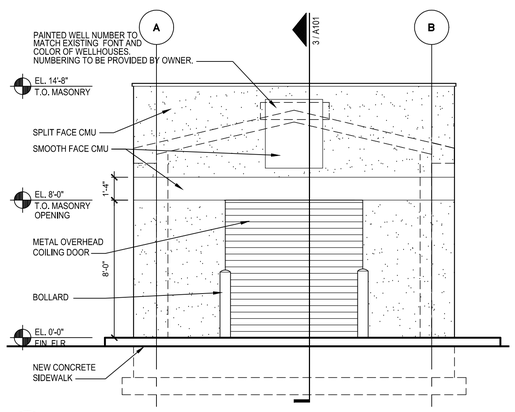

5 A-1 WEST ELEVATION
SCALE: 1/4" = 1'-0"

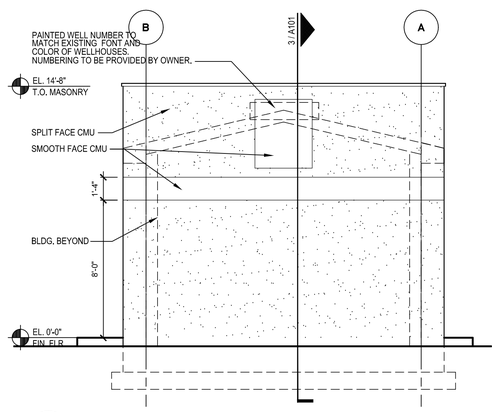

6 A-1 EAST ELEVATION
SCALE: 1/4" = 1'-0"

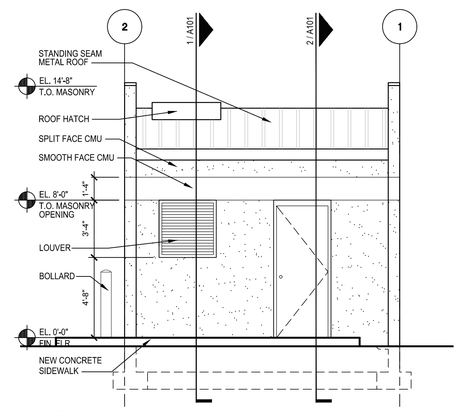

7 A-1 SOUTH ELEVATION
SCALE: 1/4" = 1'-0"

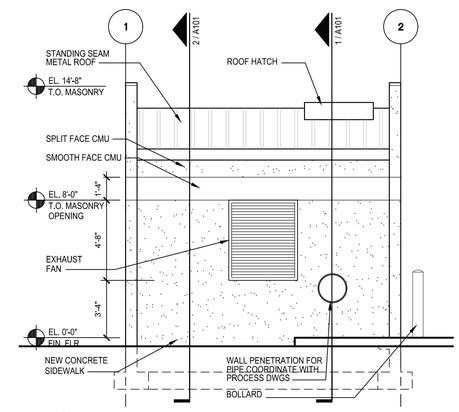

8 A-1 NORTH ELEVATION
SCALE: 1/4" = 1'-0"

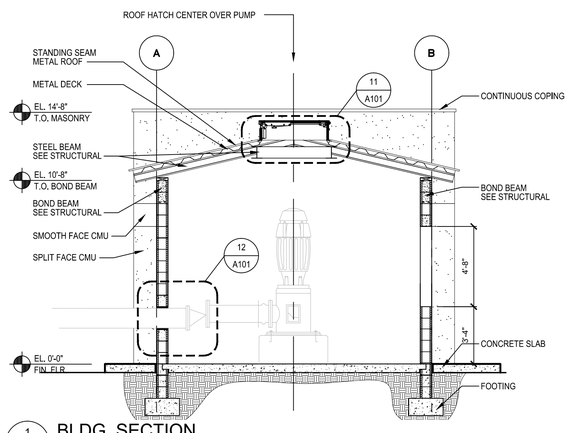

1 A-1 BLDG. SECTION
SCALE: 1/4" = 1'-0"

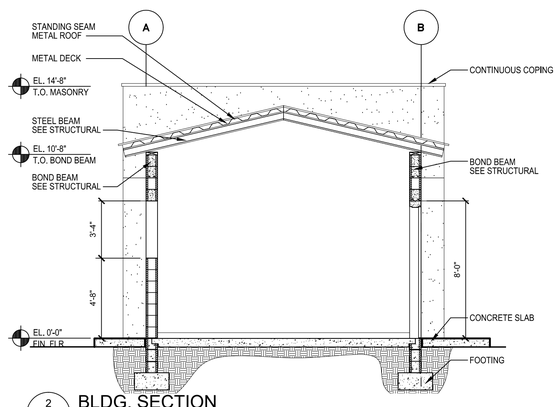

2 A-1 BLDG. SECTION
SCALE: 1/4" = 1'-0"

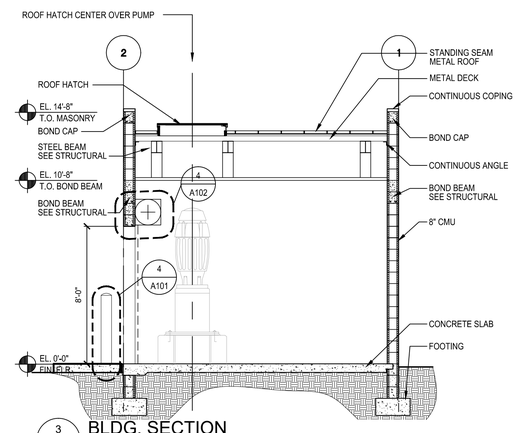

3 A-1 BLDG. SECTION
SCALE: 1/4" = 1'-0"

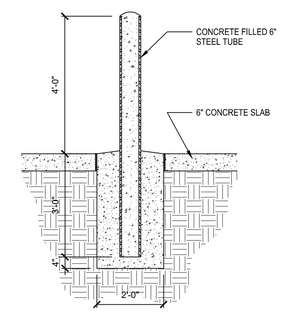

4 A-1 BOLLARD DETAIL
SCALE: 1/2" = 1'-0"

TETRA TECH
www.tetratech.com
201 E. PINE STREET, SUITE 1000
ORLANDO, FL 32801
PHONE (407)-839-3955 FAX: (407)-839-3790

BID SET
DAN-MICHAEL TRBOVICH AR96020

BORRELLI + PARTNERS
ARCHITECTURE PLANNING LANDSCAPE INTERIOR
720 VASSAR STREET
ORLANDO, FL 32804 (407) 418-1338

CONFIDENTIAL THE DRAWINGS THE PROPERTY OF BORRELLI + PARTNERS UNLESS OTHERWISE PROVIDED FOR IN A WRITTEN AGREEMENT. THESE DOCUMENTS SHALL NOT BE REPRODUCED, CHANGED OR COPIED IN ANY FORM OR MANNER WHATSOEVER, NOR ARE THEY TO BE ASSIGNED TO ANY THIRD PARTY EXCEPT AS AGREED TO BY THE ARCHITECT. COPYRIGHT BORRELLI + PARTNERS, AN. 2007.

MARK	DATE	DESCRIPTION	BY

ORANGE COUNTY UTILITIES
WESTERN REGIONAL WATER SUPPLY
FACILITY IMPROVEMENTS - PHASE 3B

WELL HOUSE FLOOR PLAN, ROOF PLAN, ELEVATIONS AND SECTIONS

Project No.:	200-158870
Designed By:	MWR
Drawn By:	DMT
Checked By:	MWR

A101

Copyright: Tetra Tech

Bar Measures 1 inch

8/30/2018 10:56:40 AM - P:\12-203 WSAI - WESTERN REGIONAL WSF - 3B\4 - DRAWINGS\A - ACTIVE DRAWINGS\1 - B+P\12.203_A101- WELLHOUSE.DWG - DAN TRBOVICH

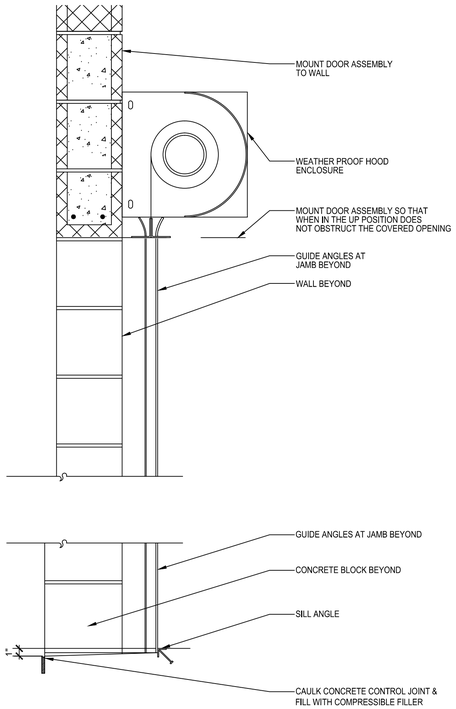

4 / A-2 COILING DOOR HEAD DETAIL
SCALE: 1 1/2" = 1'-0"

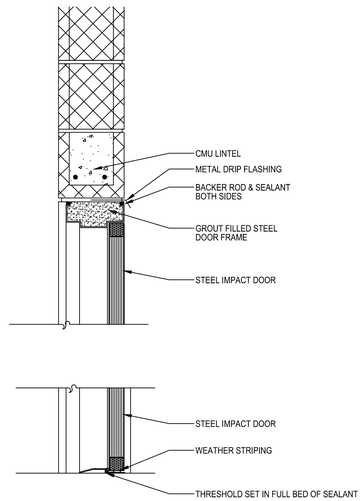

5 / A-2 DOOR HEAD DETAIL
SCALE: 1 1/2" = 1'-0"

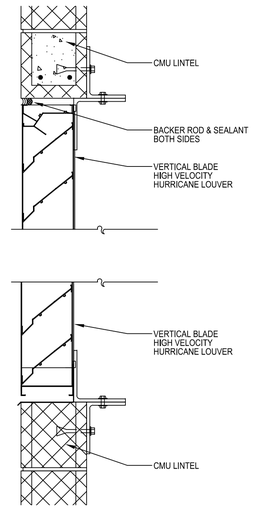

6 / A-2 LOUVER HEAD DETAIL
SCALE: 1 1/2" = 1'-0"

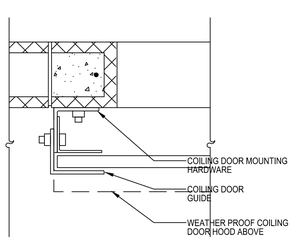

1 / A-2 COILING DOOR JAMB DETAIL
SCALE: 1 1/2" = 1'-0"

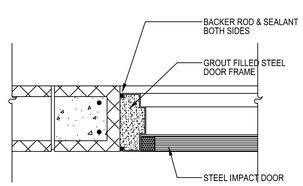

2 / A-2 DOOR JAMB DETAIL
SCALE: 1 1/2" = 1'-0"

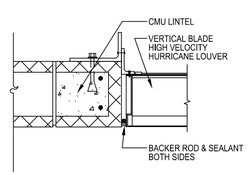

3 / A-2 LOUVER JAMB DETAIL
SCALE: 1 1/2" = 1'-0"

TETRA TECH
www.tetratech.com
201 E. PINE STREET, SUITE 1000
ORLANDO, FL 32801
PHONE (407) 839-3955 FAX: (407) 839-3790

BID SET
DAN-MICHAEL TRBOVICH AR96020

BORRELLI + PARTNERS
ARCHITECTURE PLANNING LANDSCAPE INTERIOR
720 VASSAR STREET
ORLANDO, FL 32804 (407) 418-1338

CONFIDENTIAL THIS DRAWING IS THE PROPERTY OF BORRELLI + PARTNERS UNLESS OTHERWISE PROVIDED BY CONTRACT. THIS DOCUMENT MAY NOT BE REPRODUCED OR DISTRIBUTED TO ANYONE OTHER THAN EXCEPT AS AGREED TO BY THE ARCHITECT. COPYRIGHT BORRELLI + PARTNERS, A.C. 2003.

MARK	DATE	DESCRIPTION	BY

ORANGE COUNTY UTILITIES
WESTERN REGIONAL WATER SUPPLY FACILITY IMPROVEMENTS - PHASE 3B
DOOR DETAILS

Project No.:	200-158870
Designed By:	MWR
Drawn By:	DMT
Checked By:	MWR

A501

Copyright: Tetra Tech

Bar Measures 1 inch

8/30/2018 10:57:11 AM - P:\12-203 WSAI - WESTERN REGIONAL WSF - 3B\4 – DRAWINGS\A - ACTIVE DRAWINGS\1 – B+P\12.203_A501- DOOR DETAILS.DWG - DAN TRBOVICH

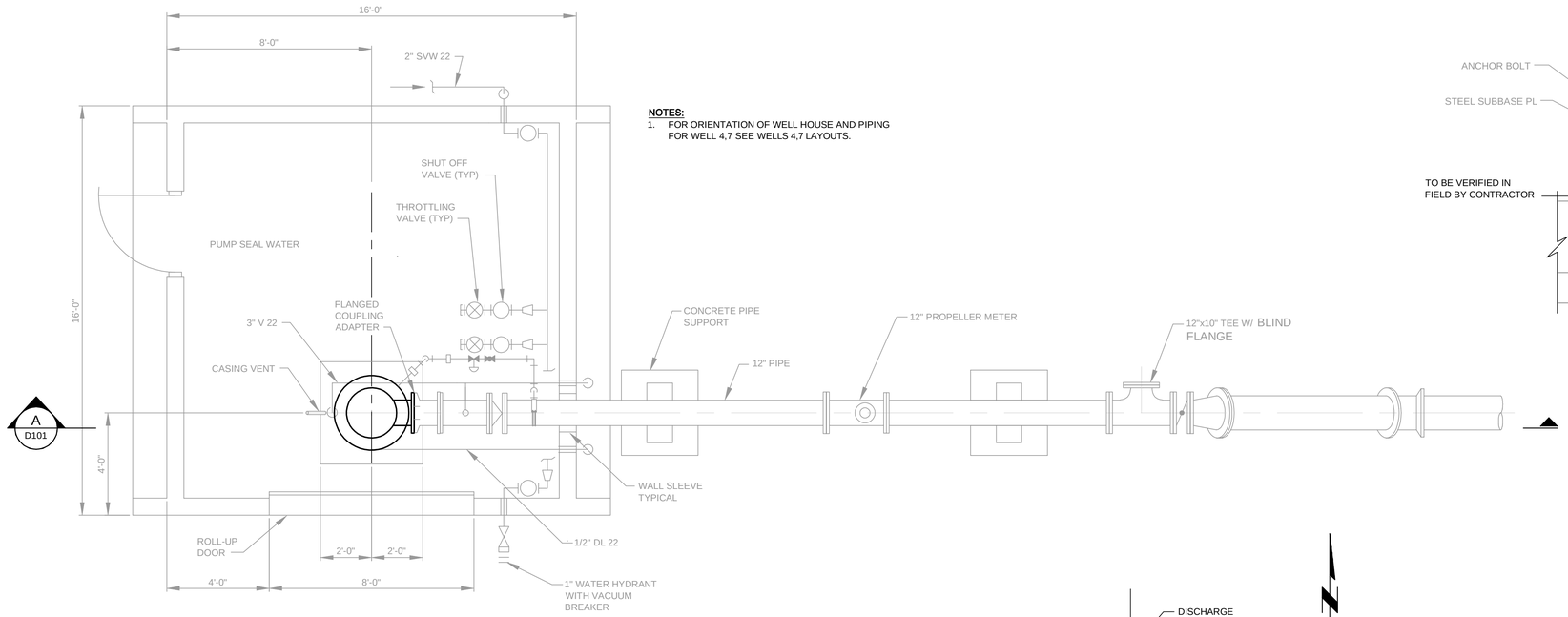

NOTES:
1. FOR ORIENTATION OF WELL HOUSE AND PIPING FOR WELL 4,7 SEE WELLS 4,7 LAYOUTS.

EXISTING WELL HOUSE (TYPICAL) WELL 4 & 7

PLAN

SCALE: 3/8"=1'-0"

NOTE:
WELL PUMP REPLACEMENT WORK SHALL BE IN ACCORDANCE WITH SPECIFICATION SECTION 11213.
PUMP BASE PLATE DIMENSIONS TO BE FIELD VERIFIED BY THE CONTRACTOR.

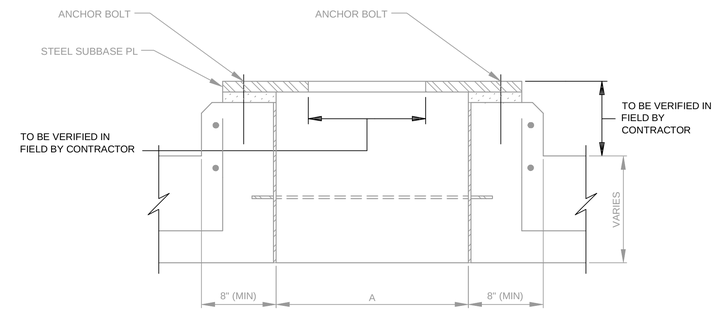

EXISTING VERTICAL WELL PUMP BASE

DETAIL

SCALE: NTS

1
D101

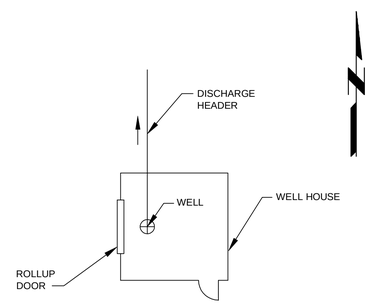

WELL 4 LAYOUT

SCALE: 3/32"=1'-0"

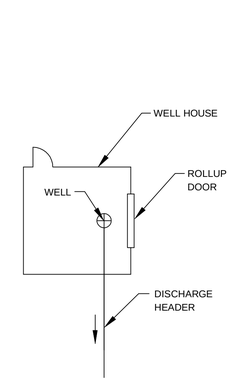

WELL 7 LAYOUT

SCALE: 3/32"=1'-0"

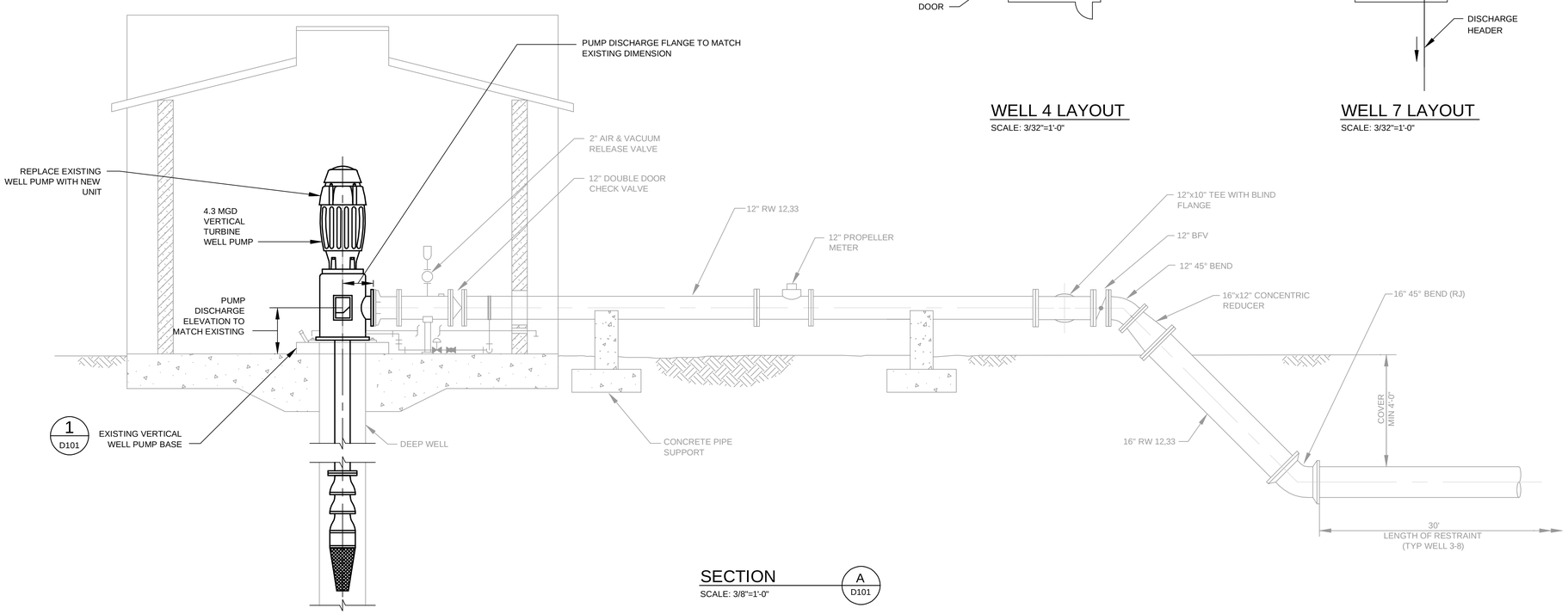

SECTION

SCALE: 3/8"=1'-0"

A
D101

TETRA TECH
www.tetratech.com
201 EAST PINE STREET, SUITE 1000
ORLANDO, FLORIDA 32801
PHONE: (407) 839-3955 FAX: (407) 839-3790

BID SET

MARK	DATE	DESCRIPTION	BY

Client: ORANGE COUNTY UTILITIES
Proj. Loc.: ORANGE COUNTY, FL

WESTERN REGIONAL WATER SUPPLY FACILITY
IMPROVEMENTS PHASE 3B

EXISTING WELLS
NO. 4 & 7
PLAN AND SECTION

Project No.:	200-158870-16001
Designed By:	JCB
Drawn By:	JTE
Checked By:	JPT

D101

Copyright: Tetra Tech

Thursday, August 23, 2018 8:48:53 AM DRAWING: \\TTs181fs1\projects\ER\158870\200-158870-16001\CAD\SheetFiles\D101 - EXIST WELL BLDG PLAN & SEC .DWG LAYOUT: D101 USER NAME: EVANS, JON

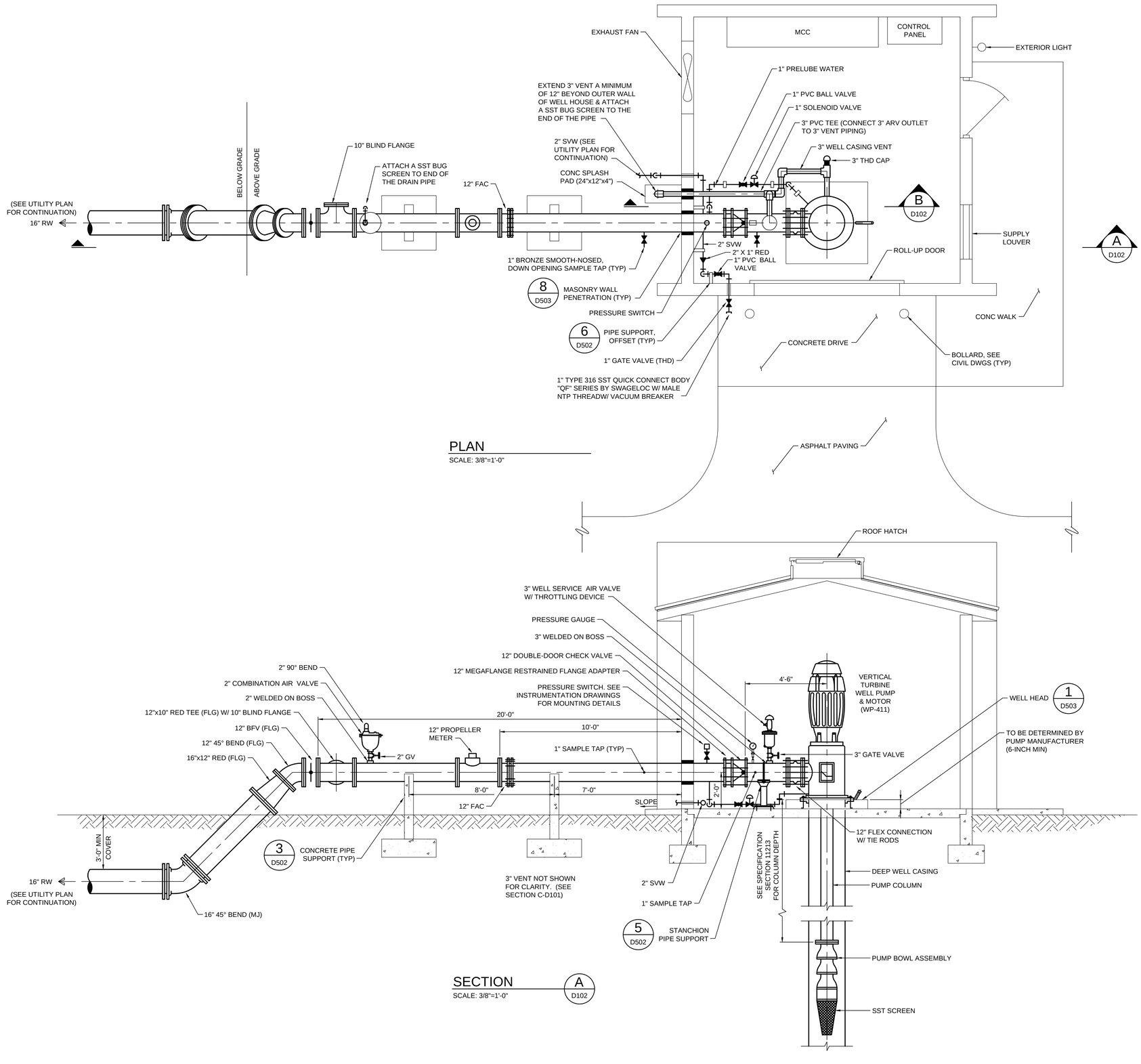

PLAN

SCALE: 3/8"=1'-0"

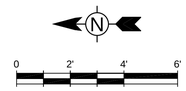

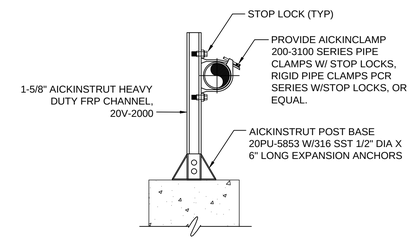

PIPE SUPPORT - POST

DETAIL 1 D102

SCALE: NTS

SECTION A D102

SCALE: 3/8"=1'-0"

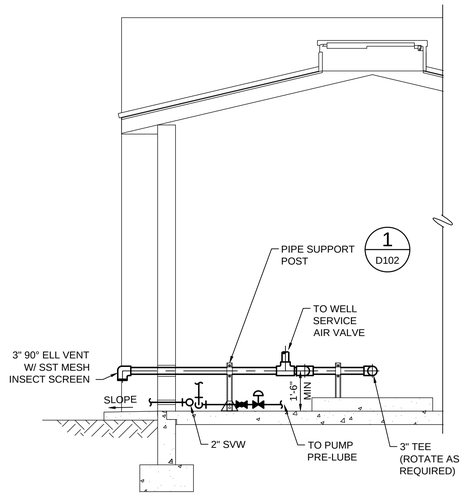

SECTION B D102

SCALE: 3/8"=1'-0"

TETRA TECH
www.tetratech.com
201 EAST PINE STREET, SUITE 1000
ORLANDO, FLORIDA 32801
PHONE: (407) 839-3955 FAX: (407) 839-3790

BID SET

MARK	DATE	DESCRIPTION	BY

Client: ORANGE COUNTY UTILITIES
Proj. Loc: ORANGE COUNTY, FL

WESTERN REGIONAL WATER SUPPLY FACILITY IMPROVEMENTS PHASE 3B

PROPOSED WELL NO. 11 PLAN AND SECTION

Project No.:	200-158870-16001
Designed By:	JCB
Drawn By:	JTE
Checked By:	JPT

D102

Copyright: Tetra Tech

Thursday, August 30, 2018 5:08:52 PM DRAWING: P:\IER\158870\200-158870-16001\CAD\SheetFiles\D102 - PROP WELL BLDG PLAN & SEC.DWG LAYOUT: D102 USER NAME: BUNDY, JON

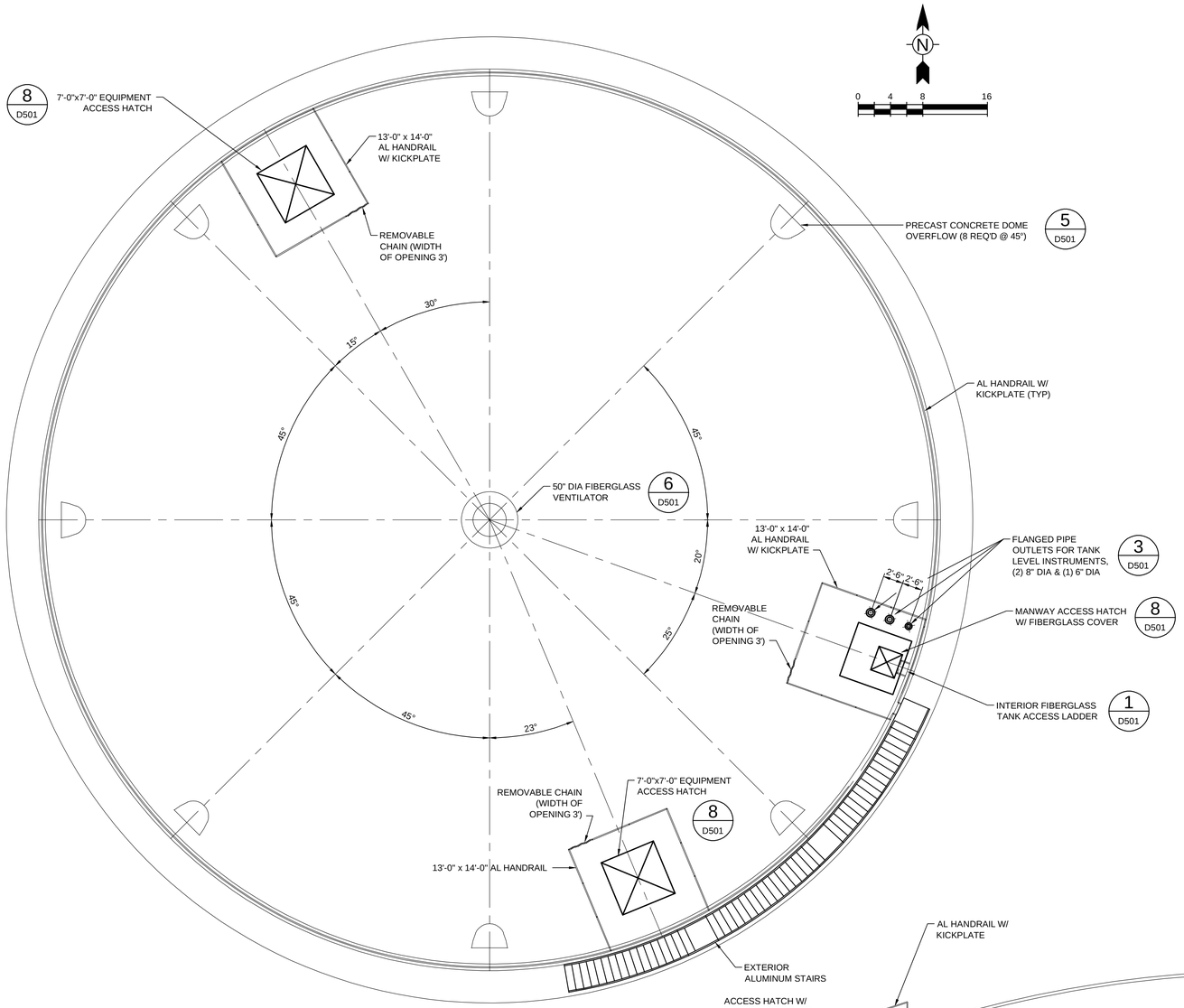

UPPER PLAN

SCALE: 1/8"=1'-0"

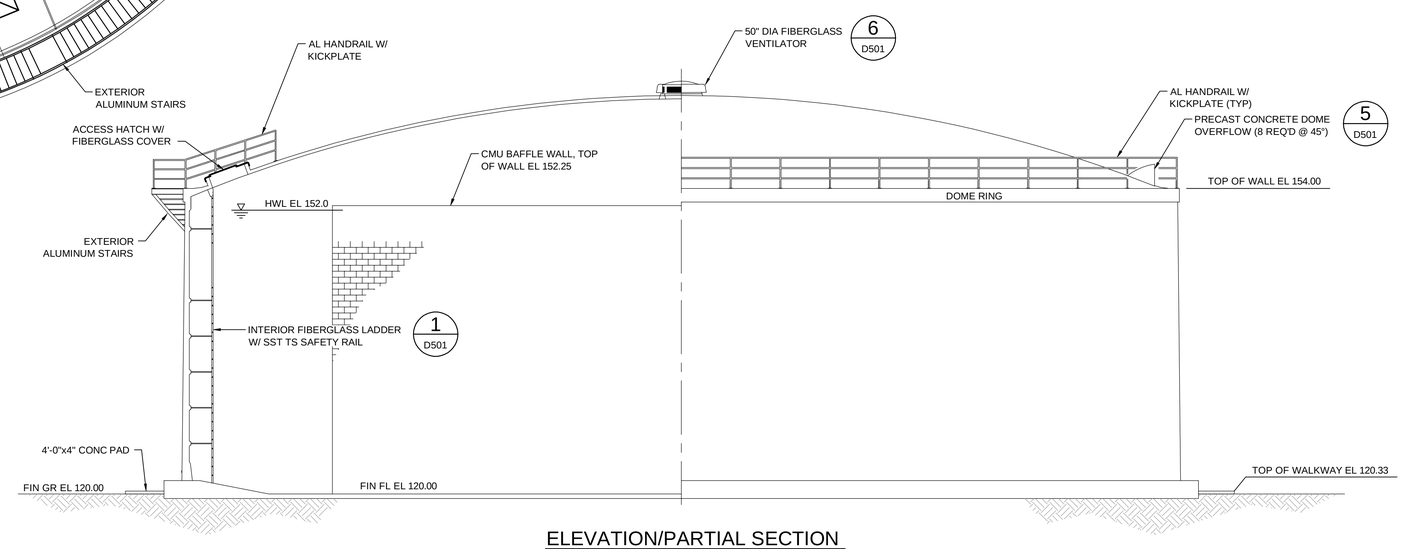

ELEVATION/PARTIAL SECTION

SCALE: 1/8"=1'-0"

NOTES:

1. CONTRACTOR IS RESPONSIBLE FOR APPLYING FOR AND OBTAINING ALL BUILDING PERMITS ASSOCIATED WITH THE GROUND STORAGE TANK AND SHALL PAY ALL ASSOCIATED FEES.
2. GROUND STORAGE TANK MANUFACTURER IN ADDITION TO THE SUBMITTAL REQUIREMENTS SPECIFIED SHALL PROVIDE NINE (9) SETS OF SIGNED AND SEALED DRAWINGS AND CALCULATIONS FOR BUILDING DEPARTMENT APPLICATION TO BE PREPARED AND SUBMITTED BY THE CONTRACTOR AT NO ADDITIONAL COST TO THE OWNER.

TETRA TECH
www.tetratech.com
201 EAST PINE STREET, SUITE 1000
ORLANDO, FLORIDA 32801
PHONE: (407) 839-3955 FAX: (407) 839-3790

BID SET

MARK	DATE	DESCRIPTION	BY

Client: ORANGE COUNTY UTILITIES
Proj. Loc.: ORANGE COUNTY, FL

WESTERN REGIONAL WATER SUPPLY FACILITY
IMPROVEMENTS PHASE 3B

PROPOSED 2 MG GROUND STORAGE TANK PLAN AND ELEVATION

Project No.:	200-158870-16001
Designed By:	JCB
Drawn By:	JTE
Checked By:	JPT

D103

Copyright: Tetra Tech

Thursday, August 23, 2018 8:49:08 AM DRAWING: \\TTs1811s1\projects\ER\158870\200-158870-16001\CAD\SheetFiles\D103_104 PROP GST PLAN & PROF .DWG LAYOUT: D103 USER NAME: EVANS, JON

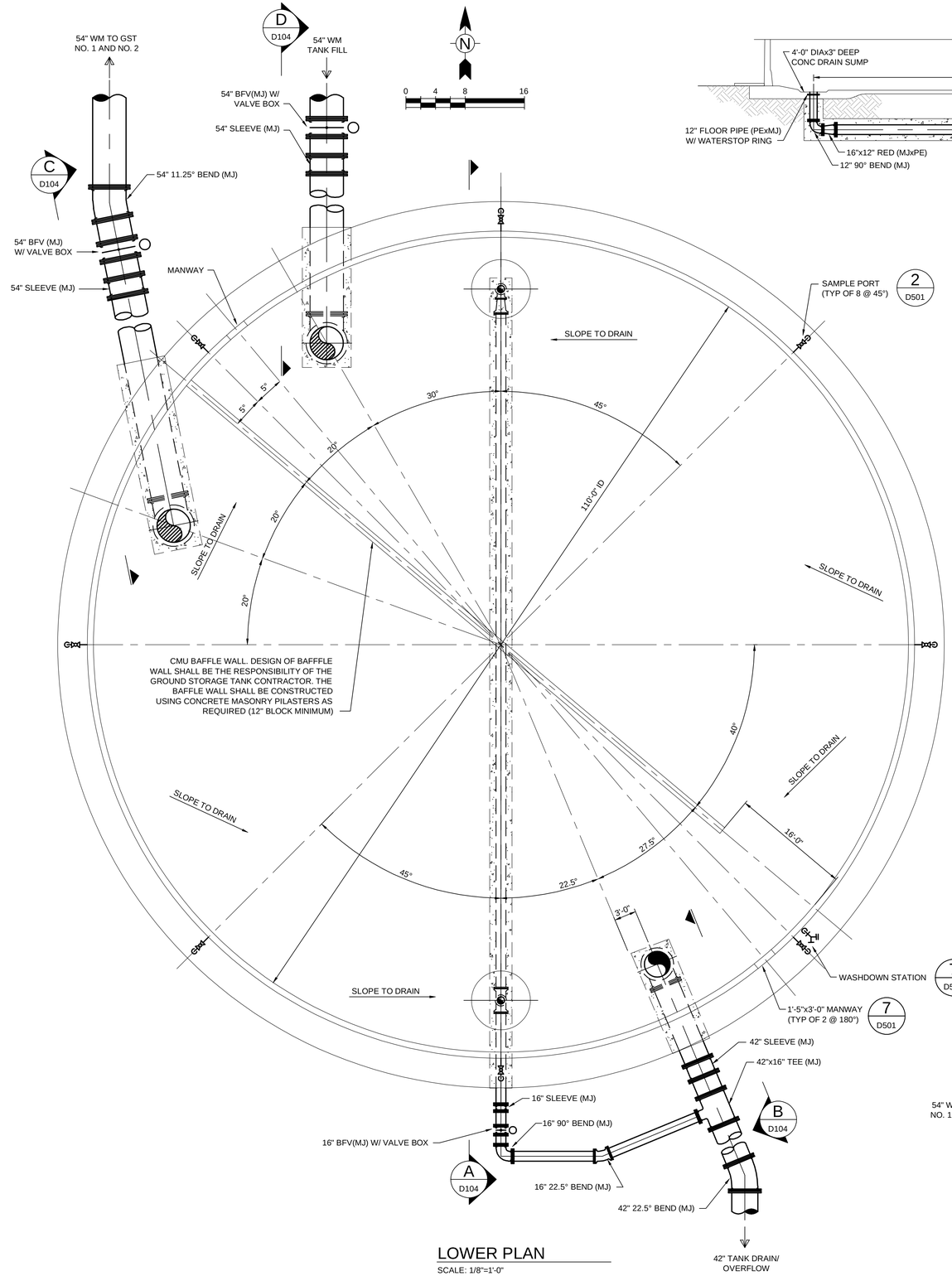

LOWER PLAN
SCALE: 1/8"=1'-0"

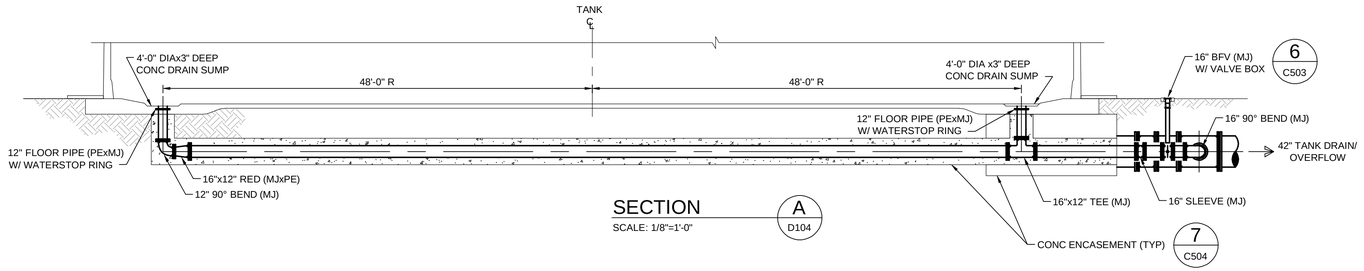

SECTION A
SCALE: 1/8"=1'-0" — D104

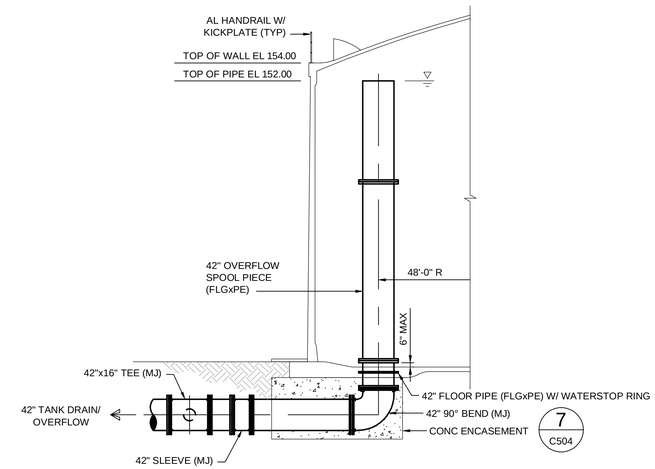

SECTION B
SCALE: 1/8"=1'-0" — D104

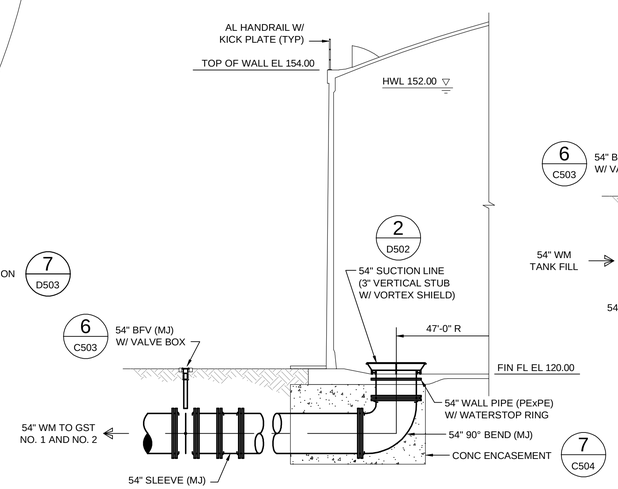

SECTION C
SCALE: 1/8"=1'-0" — D104

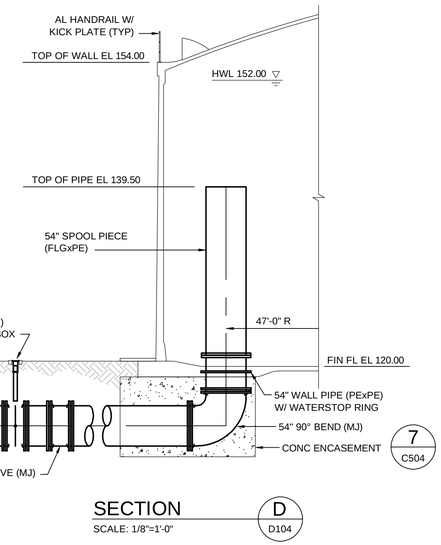

SECTION D
SCALE: 1/8"=1'-0" — D104

TETRA TECH
www.tetratech.com
201 EAST PINE STREET, SUITE 1000
ORLANDO, FLORIDA 32801
PHONE: (407) 839-3955 FAX: (407) 839-3790

BID SET

MARK	DATE	DESCRIPTION	BY

Client: ORANGE COUNTY UTILITIES
Proj. Loc.: ORANGE COUNTY, FL

WESTERN REGIONAL WATER SUPPLY FACILITY
IMPROVEMENTS PHASE 3B

PROPOSED 2 MG GROUND STORAGE TANK LOWER PLAN AND SECTIONS

Project No.:	200-158870-16001
Designed By:	JCB
Drawn By:	JTE
Checked By:	JPT

D104

Copyright: Tetra Tech

Thursday, August 23, 2018 8:49:09 AM DRAWING: \\TTs1811s1\projects\ER\158870\200-158870-16001\CAD\SheetFiles\D103_104 PROP GST PLAN & PROF .DWG LAYOUT: D104 USER NAME: EVANS, JON

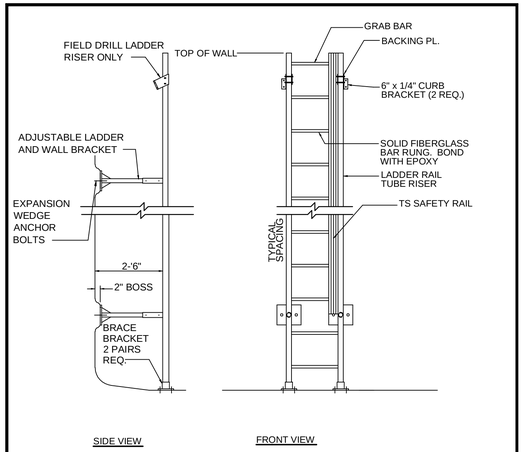

INTERIOR FIBERGLASS LADDER WITH TS SAFTEY RAIL

DETAIL 1
SCALE: NTS

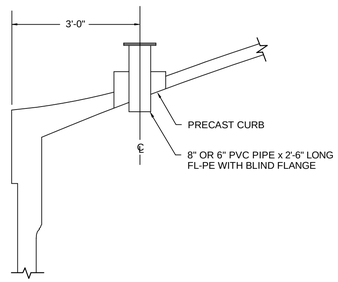

LIQUID LEVEL TRANSMITTER

DETAIL 3
SCALE: NTS

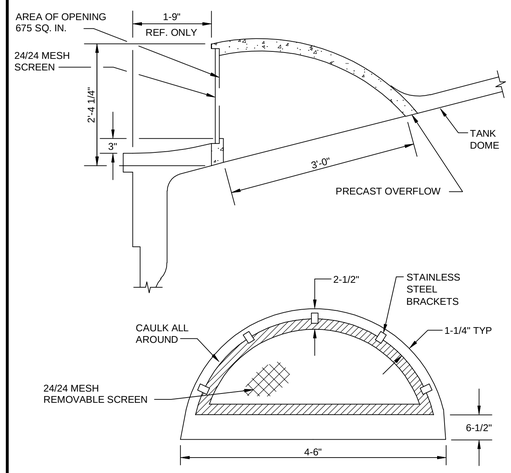

NOTE: KEEP SHOTCRETE REBOUND CLEANED OFF OF OVERFLOW. LEAVE PLYWOOD COVER IN PLACE UNTIL ALL SHOTCRETING IS COMPLETE.

PRECAST CONCRETE DOME OVERFLOW

DETAIL 5
SCALE: NTS

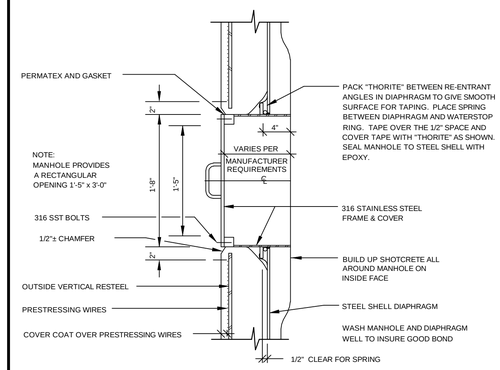

STAINLESS STEEL WALL MANHOLE

DETAIL 7
SCALE: NTS

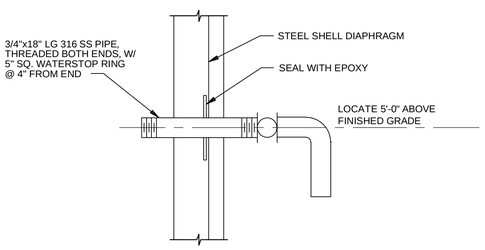

GST SAMPLE PORT

DETAIL 2
SCALE: NTS

NOT USED

DETAIL 4
SCALE: NTS

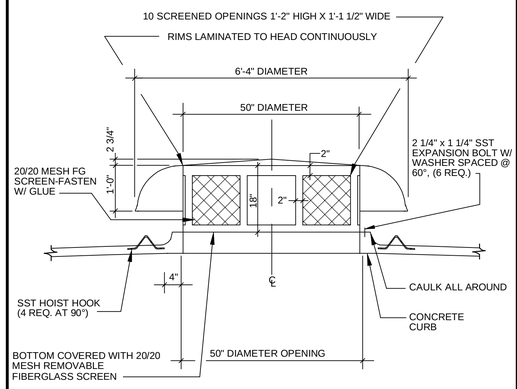

50" FIBERGLASS VENTILATOR

DETAIL 6
SCALE: NTS

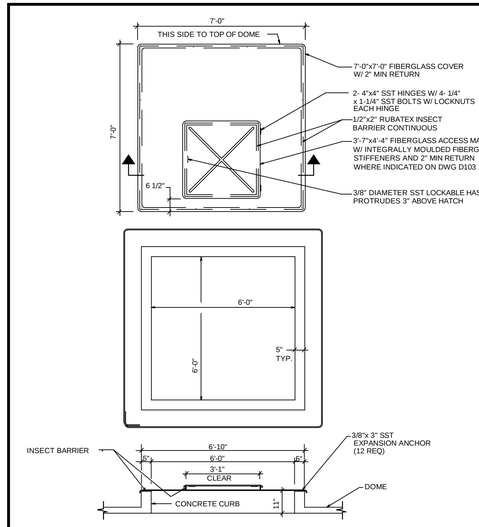

SECTION

FIBERGLASS HATCH COVER

DETAIL 8
SCALE: NTS

TETRA TECH
www.tetratech.com
201 EAST PINE STREET, SUITE 1000
ORLANDO, FLORIDA 32801
PHONE: (407) 839-3955 FAX: (407) 839-3790

BID SET

MARK	DATE	DESCRIPTION	BY

Client: ORANGE COUNTY UTILITIES
Proj. Loc: ORANGE COUNTY, FL

WESTERN REGIONAL WATER SUPPLY FACILITY
IMPROVEMENTS PHASE 3B

PROPOSED 2 MG
GROUND STORAGE TANK
DETAILS

Project No.:	200-158870-16001
Designed By:	JCB
Drawn By:	JTE
Checked By:	JPT

D501

Copyright: Tetra Tech

Thursday, August 23, 2018 8:49:14 AM DRAWING: \\TTS181FS1\Projects\IER\158870\200-158870-16001\CAD\SheetFiles\D500 - PROCESS DETAILS .DWG LAYOUT: D501 USER NAME: EVANS, JON

NOT USED

DETAIL 1
SCALE: NTS

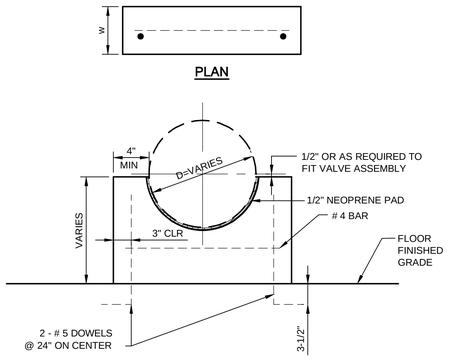

NOTE:
PROVIDE CONCRETE FOOTING BELOW GRADE FOR ALL FINISHED GRADE APPLICATIONS.

PIPE DIAMETER "D" INCHES	MINIMUM SUPPORT WIDTH "W" INCHES
12 ≤	6
16 ≤	8
24 ≤	12
36 ≤	18

CONCRETE PIPE SUPPORT

DETAIL 3
SCALE: NTS

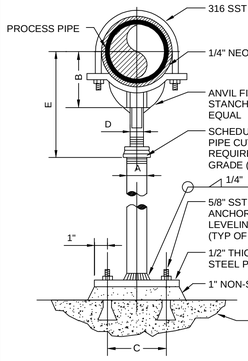

NOTES:

1. HOT-DIP GALVANIZE ENTIRE PIPE SUPPORT AFTER FABRICATION (EXCEPT FOR STAINLESS STEEL FASTENING HARDWARE).
2. SEE PLANS AND SECTIONS FOR PIPE GRADE REQUIREMENT (DIMENSION "E").
3. PROVIDE INSULATION PROTECTION SHIELD (GRINNELL FIG 167 OR EQUAL) WHEN PIPING IS INSULATED.

PIPE SIZE	A	B	C	D	E	
					MIN	MAX
4	4	4 3/16	7	3	9 1/2	14
5	4	4 13/16	7	3	10 1/8	14 5/8
6	4	5 7/16	7	3	10 3/4	15 1/4
8	4	6 15/16	7	3	12 1/4	16 3/4
10	4	8 7/16	7	3	13 3/4	18 1/4
12	4	9 15/16	7	3	14 5/8	19 1/8
16	4	11 1/2	7	3	16 13/16	21 5/16

* ALL DIMENSIONS IN INCHES.

PIPE SUPPORT - ADJUSTABLE STANCHION SADDLE

DETAIL 5
SCALE: NTS

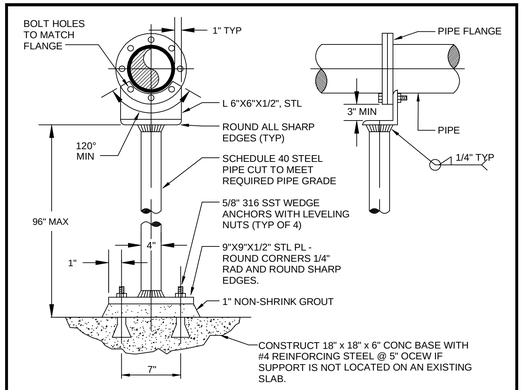

NOTES:

1. HOT-DIP GALVANIZE ENTIRE PIPE SUPPORT AFTER FABRICATION (EXCEPT FOR STAINLESS STEEL FASTENING HARDWARE).
2. SEE PLANS AND SECTIONS FOR PIPE GRADE REQUIREMENT.
3. PIPE SUPPORT SUITABLE FOR PIPE SIZES 3" THROUGH 24" DIA.

PIPE SUPPORT - FLANGE

DETAIL 7
SCALE: NTS

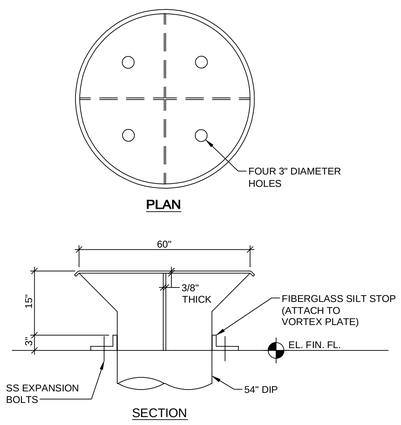

FIBERGLASS VORTEX PLATE WITH FIBERGLASS SILT STOP

DETAIL 2
SCALE: NTS

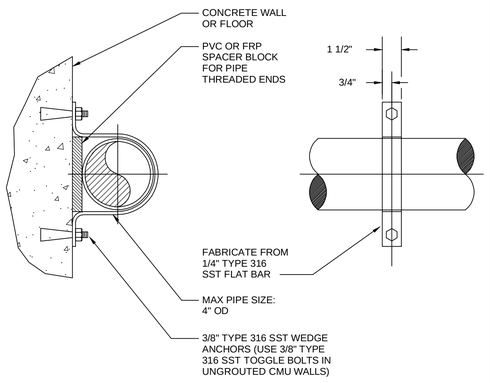

PIPE SUPPORT - FLUSH

DETAIL 4
SCALE: NTS

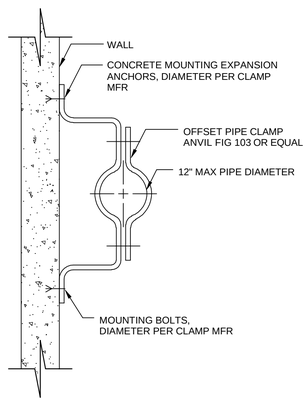

NOTE:

ALL MATERIALS OF CONSTRUCTION SHALL BE 316 STAINLESS STEEL OR ALUMINUM. ALL MOUNTING HARDWARE SHALL BE 316 STAINLESS STEEL.

DETAIL 6
SCALE: NTS

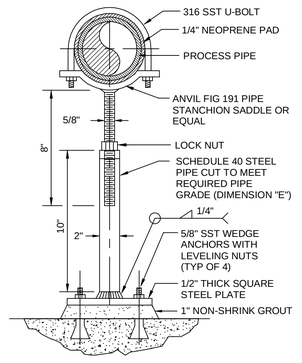

SERVICE:
STANCHION TYPE SUPPORT WHERE ADJUSTMENT IS REQUIRED, PLUS THE ADDITIONAL STABILITY PROVIDED BY U-BOLT ATTACHMENT TO PIPE.

MATERIAL:
CARBON STEEL

FINISH:
HOT-DIP GALVANIZE ENTIRE PIPE SUPPORT AFTER FABRICATION (EXCEPT FOR STAINLESS STEEL FASTENING HARDWARE).

NOTE:
SEE PLANS AND SECTIONS FOR PIPE

PIPE SUPPORT - ADJUSTABLE STANCHION SADDLE W/ U-BOLT FOR PIPE 3-1/2 INCHES AND SMALLER

DETAIL 8
SCALE: NTS

TETRA TECH
www.tetratech.com
201 EAST PINE STREET, SUITE 1000
ORLANDO, FLORIDA 32801
PHONE: (407) 839-3955 FAX: (407) 839-3790

BID SET

MARK	DATE	DESCRIPTION	BY

Client: ORANGE COUNTY UTILITIES
Proj. Loc: ORANGE COUNTY, FL

WESTERN REGIONAL WATER SUPPLY FACILITY
IMPROVEMENTS PHASE 3B

PROPOSED 2 MG
GROUND STORAGE TANK
DETAILS

Project No.:	200-158870-16001
Designed By:	JCB
Drawn By:	JTE
Checked By:	JPT

D502

Copyright: Tetra Tech

Thursday, August 23, 2018 8:49:14 AM DRAWING: \\TTS181FS1\Projects\IER\158870\200-158870-16001\CAD\SheetFiles\D500 - PROCESS DETAILS .DWG LAYOUT: D502 USER NAME: EVANS, JON

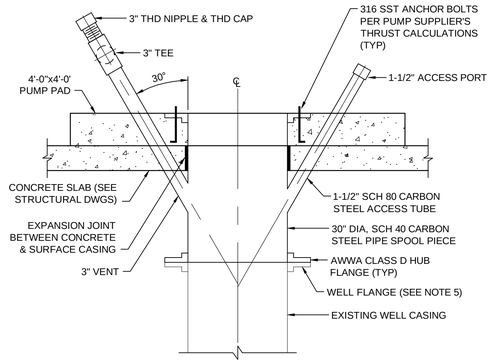

NOTES:

1. FLANGES SHALL BE MANUFACTURED IN ACCORDANCE WITH ASTM A283, GRADE B OR C OR ASTM A53, GRADE B.
2. SPOOL PIECE SHALL BE FABRICATED TO MEET THE REQUIREMENTS OF ASTM A283, GRADE B OR C OR ASTM A53, GRADE B.
3. THE COMPLETED SPOOL PIECE ASSEMBLY SHALL BE COATED IN ACCORDANCE WITH SPECIFICATION SECTION 09900.
4. DRILL FLANGES FOR ANSI B 16.5, 150 PSI STANDARD.
5. CONTRACTOR TO REMOVE EXISTING WELL FLANGE AND BLIND PLATE AND CUT WELL CASING TO PROPER HEIGHT AND INSTALL NEW 30" 100 PSI, 150 #, VAN STONE SOC FLANGE.

WELL HEAD

DETAIL 1 / -
SCALE: NTS

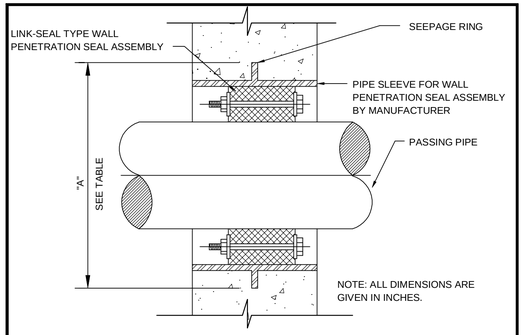

PIPE SIZE	NOMINAL SLEEVE DIA	"A"	PIPE SIZE	NOMINAL SLEEVE DIA	"A"
2	4	6	12	16	19
2-1/2	4	7	14	18	21
3	5	7-1/2	16	20	23-1/2
4	6	9	18	24	25
6	10	13	20	24	27-1/2
8	12	15	24	30	32
10	14	17			

PENETRATION SEAL, LINK SEAL (CAST)

DETAIL 3 / -
SCALE: NTS

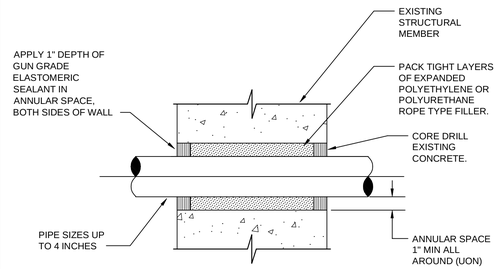

PENETRATION SEAL CONCRETE WALL OR FLOOR (SMALL DIAMETER)

DETAIL 5 / -
SCALE: NTS

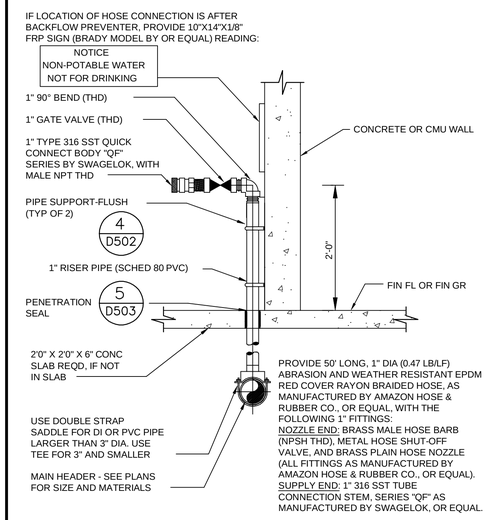

HOSE VALVE, WALL-MOUNTED

DETAIL 7 / -
SCALE: NTS

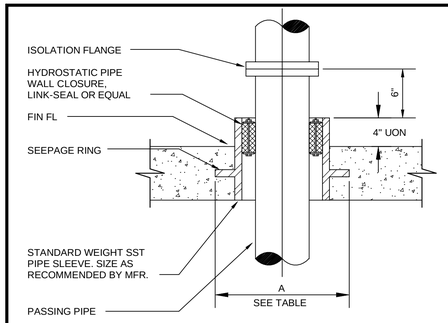

SLEEVE SIZE	A	SLEEVE SIZE	A
2	6	14	21
2 1/2	7	16	23 1/2
3	7 1/2	18	25
3 1/2	8 1/2	20	27 1/2
4	9	24	32
6	11	30	38 3/4
8	13 1/2	36	46
10	16	42	53
12	19	48	59 1/2

* ALL DIMENSIONS IN INCHES.

PENETRATION SEAL FLOOR

DETAIL 2 / -
SCALE: NTS

NOT USED

DETAIL 4 / -
SCALE: NTS

NOT USED

DETAIL 6 / -
SCALE: NTS

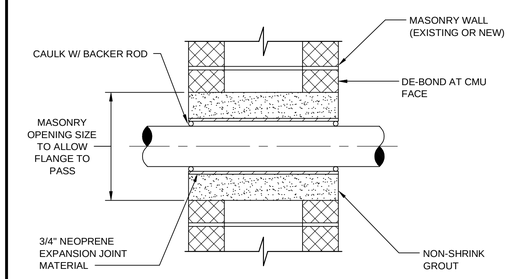

WALL PENETRATION MASONRY WALL

DETAIL 8 / -
SCALE: NTS

TETRA TECH
www.tetratech.com
201 EAST PINE STREET, SUITE 1000
ORLANDO, FLORIDA 32801
PHONE: (407) 839-3955 FAX: (407) 839-3790

BID SET

MARK	DATE	DESCRIPTION	BY

Client: ORANGE COUNTY UTILITIES
Proj. Loc: ORANGE COUNTY, FL

WESTERN REGIONAL WATER SUPPLY FACILITY
IMPROVEMENTS PHASE 3B

MISCELLANEOUS DETAILS

Project No.:	200-158870-16001
Designed By:	JCB
Drawn By:	JTE
Checked By:	JPT

D503

Copyright: Tetra Tech

Thursday, August 23, 2018 8:49:15 AM DRAWING: \\TTS181FS11\Projects\IER\158870\200-158870-16001\CAD\SheetFiles\D500 - PROCESS DETAILS .DWG LAYOUT: D503 USER NAME: EVANS, JON

GRAPHIC SYMBOLS FOR HEATING, VENTILATION, & AIR CONDITIONING

- AIR FLOW DIRECTION
- THERMOSTAT
- WALL EXHAUST FAN W/DAMPER
- LOUVERS AND SCREEN

HVAC ABBREVIATIONS

ARCH	ARCHITECTURAL
CFM	CUBIC FEET PER MINUTE (AIR FLOW)
EF	EXHAUST FAN
GA	GAUGE
HP	HORSEPOWER
L	LOUVER
NO.	NUMBER
SP	STATIC PRESSURE
TYP	TYPICAL

EXHAUST FANS

MARK	LOCATION	CFM	SP	MOTOR HP	VOLTS	PHASE	ROUGH OPENING	MANUFACTURER MODEL NO.	REMARKS: FURNISH ALL FANS WITH DISCONNECT SWITCHES
EF-10	WELL HOUSE 11	4,100	0.35	3/4	460	3	34X34	GRENHECK SBE-3H24-7	PROVIDE BACK DRAFT DAMPER

NOTES:
1. ALL BELT-DRIVE FANS SHALL BE FURNISHED WITH EXTENDED LUBE LINES AND (3) SPARE BELTS.
2. PROVIDE WALL HOUSING FOR ALL WALL-MOUNTED FANS.

LOUVER SCHEDULE

MARK	DESCRIPTION	MOUNTING	MANUFACTURER MODEL	MATERIAL	SIZE	DESCRIPTION	ASSOCIATED EQUIPMENT	ACCESSORIES/REMARKS
L-14	WELL HOUSE 11	WALL	GREENHECK EHH-501X	ALUM	48X56	INTAKE	N/A	SEE NOTES 1, 2, 3 & 4
L-15	WELL HOUSE 11	WALL	GREENHECK EHH-501X	ALUM	40X40	EXHAUST	EF-10	SEE NOTES 1, 2, 3 & 5

NOTES:
1. LOUVERS MUST BE FLORIDA PRODUCT APPROVED.
2. PROVIDE EXTENDED SILL.
3. PROVIDE PERMATECTOR COATING. COLOR BY ARCHITECT.
4. PROVIDE BIRDSCREEN AND INSECT SCREEN.
5. PROVIDE BIRDSCREEN AND NECESSARY COMPONENTS FOR CONNECTION TO ASSOCIATED EXHAUST FAN.

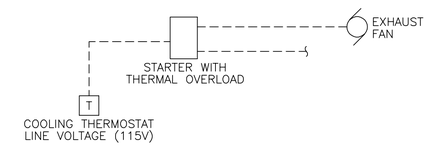

VENTILATION CONTROL DIAGRAM

SEQUENCES OF OPERATION:
EF-10:
ON A RISE IN TEMPERATURE ABOVE THE RESPECTIVE THERMOSTAT SETTING, THE EXHAUST FAN SHALL ENERGIZE. EACH FAN THERMOSTAT SHALL HAVE AN ON-OFF-AUTO SWITCH TO ALLOW MANUAL OPERATION OF FAN.

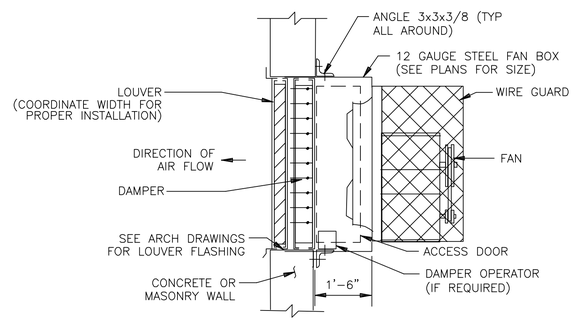

1 M001 WALL EXHAUST FAN WITH DAMPER AND FIXED LOUVER

N.T.S.

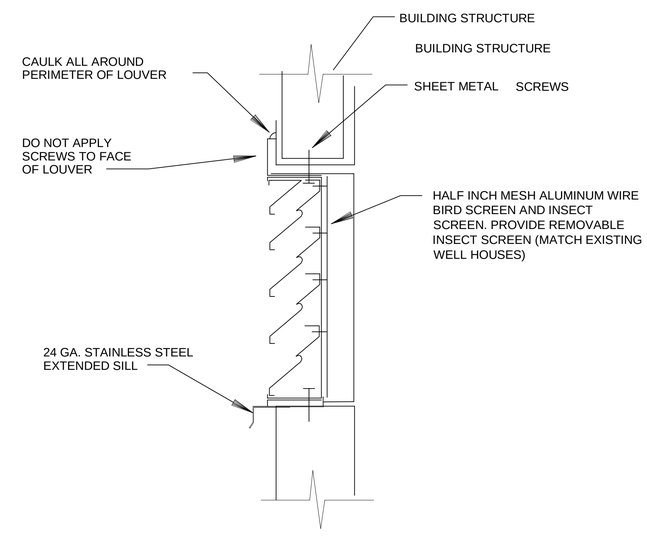

2 M001 LOUVER DETAIL

N.T.S.

TETRA TECH
www.tetratech.com
201 EAST PINE STREET, SUITE 1000
ORLANDO, FLORIDA 32801
PHONE: (407) 839-3955 FAX: (407) 839-3790

BID SET

MARK	DATE	DESCRIPTION	BY

Client: ORANGE COUNTY UTILITIES
Proj. Loc.: ORANGE COUNTY, FL
WESTERN REGIONAL WATER SUPPLY FACILITY IMPROVEMENTS PHASE 3B

HVAC SCHEDULES & DETAILS

Project No.:	200-158870-16001
Designed By:	SBR
Drawn By:	SBR
Checked By:	DSB

M001

Copyright: Tetra Tech

Thursday, August 23, 2018 8:51:19 AM DRAWING: \\TTS181FS1\Projects\ER\158870\200-158870-16001\CAD\SheetFiles\M001 - HVAC SCHEDULES & DETAILS .DWG LAYOUT: M001 USER NAME: EVANS, JON

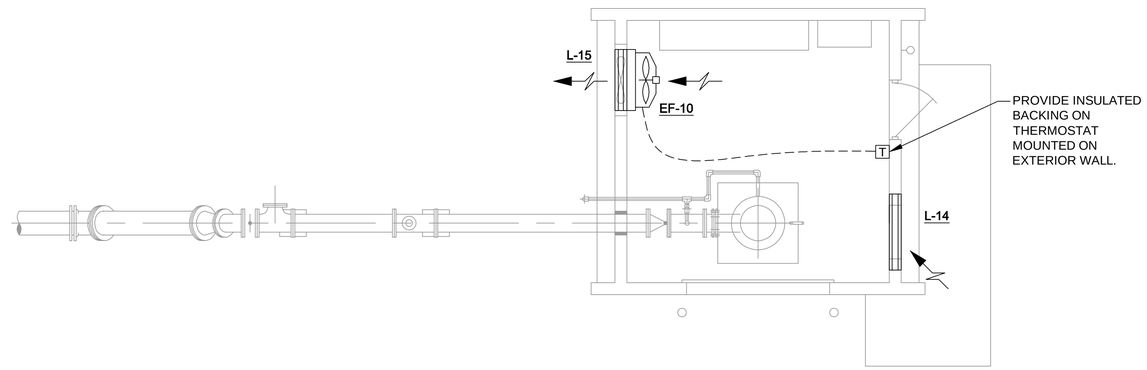

WELL HOUSE HVAC FLOOR PLAN

SCALE: 1/4"=1'-0"

TETRA TECH
www.tetratech.com
201 EAST PINE STREET, SUITE 1000
ORLANDO, FLORIDA 32801
PHONE: (407) 839-3955 FAX: (407) 839-3790

BID SET

MARK	DATE	DESCRIPTION	BY

Client: ORANGE COUNTY UTILITIES
Proj. Loc.: ORANGE COUNTY, FL

WESTERN REGIONAL WATER SUPPLY FACILITY
IMPROVEMENTS PHASE 3B

PROPOSED WELLHOUSE
HVAC FLOOR PLAN

Project No.:	200-158870-16001
Designed By:	CWQ
Drawn By:	CWQ
Checked By:	DSB

M100

Copyright: Tetra Tech

Thursday, August 23, 2018 8:51:19 AM DRAWING: \\TTS181FS1\Projects\IER\158870\200-158870-16001\CAD\SheetFiles\M100 - HVAC FLOOR PLAN - WELLHOUSE .DWG LAYOUT: M100 USER NAME: EVANS, JON

ELECTRICAL PLAN/LAYOUT

SYMBOL	DESCRIPTION
TTC	TELEPHONE TERMINAL CABINET
	TERMINAL JUNCTION BOX
	ELECTRICAL EQUIPMENT
X	CEILING MOUNTED DOWNLIGHT LUMINAIRE – SEE SCHEDULE FOR TYPE
X	FLOURESCENT LUMINAIRE, SURFACE OR LAY IN TYPE SEE SCHEDULE FOR TYPE
X	LUMINAIRE AND POLE – SEE SCHEDULE FOR TYPE
X	WALL MOUNTED LUMINAIRE – SEE SCHEDULE FOR TYPE
X	FLOOD LIGHTS – AIM IN THE DIRECTION SHOWN SEE SCHEDULE FOR TYPE
X	EXIT LIGHTS – SOLID SECTION IS DIRECTION OF FACE SEE SCHEDULE FOR TYPE
X	EMERGENCY LIGHT WITH BATTERY PACK SEE SCHEDULE FOR TYPE
	LIGHTING FIXTURE POWER AND SWITCHING LEGEND
X Y Z (TYP)	X=FIXTURE TYPE Y=PANEL–CIRCUIT BRKR Z=SWITCH IF NO Z INDICATED, CONNECT DIRECTLY TO CIRCUIT BREAKER.
[B2]	CONDUIT/CONDUCTOR – REFER TO CIRCUIT SCHEDULE
LPA–2	HOME RUN – PANEL AND CIRCUIT NUMBER SHOWN
	EXPOSED CONDUIT AND CONDUCTORS*
	UNDERGROUND CONDUIT AND CONDUCTORS* NOTE: * ALL UNMARKED CONDUIT RUNS CONSIST OF 2#12, 1#12G IN 3/4"C.
YCX	YARD CONDUIT. REFER TO YARD CONDUIT SCHEDULE
	DIRECT BURIED CONDUIT
E	EXISTING ELECTRICAL UNDERGROUND DUCTBANK
	CONDUIT, STUBBED AND CAPPED AS SHOWN
G	GROUND WIRE, 4/O BTC UNLESS OTHERWISE NOTED
	6 FOOT GROUND WIRE PIGTAIL, 4/O BTC UNLESS OTHERWISE NOTED
	GROUND ROD – 5/8" x 30' COPPER CLAD UNLESS OTHERWISE NOTED
	GROUND TEST WELL, SEE DETAIL
S	WALL SWITCH: 2– DOUBLE POLE, 3– THREE WAY, 4– FOUR WAY, WP– WEATHERPROOF, EXP–EXPLOSION PROOF, P– PILOT LIGHT, K– KEY OPERATED, D– DIMMER, CRE– CORROSION RESISTANT
	CONVENIENCE RECEPTACLE – 20A DUPLEX UNLESS SPECIFIED OTHERWISE WP–WEATHERPROOF, TL– TWIST LOCK, GFI–GROUND FAULT INTERRUPTER, C– CLOCK HANGER, CRE– CORROSION RESISTANT
	CONVENIENCE RECEPTACLE – 20A DUPLEX ON UPS POWER
	CONVENIENCE RECEPTACLE – 20A QUADROPLEX UNLESS SPECIFIED OTHERWISE
	CONVENIENCE RECEPTACLE – 20A DUPLEX UNLESS SPECIFIED OTHERWISE. LOCATED ABOVE COUNTER TOP GFI–GROUND FAULT INTERRUPTER
	CONVENIENCE RECEPTACLE – 20A DUPLEX UNLESS SPECIFIED OTHERWISE. MOUNTED FLUSH IN FLOOR.
	CONVENIENCE RECEPTACLE – 20A DUPLEX ON UPS POWER MOUNTED FLUSH IN FLOOR.
30	RECEPTACLE, SPECIAL PURPOSE – AMPERAGE AS INDICATED.
	TELEPHONE/DATA RECEPTACLE (OUTLET BOX, 18" AFF) W – WALL MOUNTED, 54" AFF
	TELEPHONE/DATA RECEPTACLE (MOUNTED FLUSH IN FLOOR)
J	JUNCTION BOX NEMA 12 ENCLOSURE UNLESS INDICATED OTHERWISE. 4X = NEMA 4X SS
F	FIRE ALARM PULL STATION
F	FIRE ALARM HORN/STROBE LIGHT
F	FIRE ALARM STROBE LIGHT
	FIRE ALARM SMOKE DETECTOR
H	FIRE ALARM HEAT DETECTOR
CR	CARD READER
DS	MAGNETIC DOOR SWITCH (PROVIDED WITH DOOR)
MM	MONITOR MODULE

SYMBOL	DESCRIPTION
FACP	FIRE ALARM CONTROL PANEL
FCA	FIRE ALARM REMOTE ANNUNCIATOR PANEL
FASP	FIRE ALARM SUB CONTROL PANEL
BD T/R	BEAM DETECTOR, T=TRANSMITTER, R=RECEIVER
D	DUCT SMOKE DETECTOR
RTS	REMOTE TEST STATION
FD	FIRE/SMOKE DAMPER
T	THERMOSTAT
TV	CABLE TV RECEPTACLE
I	LINE ISOLATOR MODULE
L	LOCK BOX
RM	RELAY MODULE

ABBREVIATIONS

ABBREVIATIONS	DESCRIPTION
A	AMMETER, AMPERE
AC	ALTERNATING CURRENT
AF	AMPERE FRAME
AFD	ADJUSTABLE FREQUENCY DRIVE
AFF	ABOVE FINISHED FLOOR
AFG	ABOVE FINISHED GRADE
AS	AMMETER SWITCH, AMPERE SENSOR
ASU	AIR SUPPLY UNIT
ATS	AUTOMATIC TRANSFER SWITCH
BC	BYPASS CONTACTOR
BRKR	BREAKER
BTC	BARE TINNED COPPER
C	CONDUIT, CONTACTOR
CB	CIRCUIT BREAKER
CKT	CIRCUIT
CMS	COMBINATION MOTOR STARTER
CPT	CONTROL POWER TRANSFORMER
CR	CONTROL RELAY
CT	CURRENT TRANSFORMER
DC	DIRECT CURRENT
DPM	DIGITAL POWER METER
DIV	DIVISION
EF	EXHAUST FAN
EG	ELECTRICAL GROUND
ETM	ELAPSED TIME METER
EXST,EXIST	EXISTING
FDR	FEEDER
F, FU	FUSE
FI	FLOW INDICATOR
FLR	FLOOR
FLUOR	FLUORESCENT
FM	FLOW METER
FS	FLOAT SWITCH, FLOW SWITCH
FT	FLOW TRANSMITTER
FUT	FUTURE
FVNR	FULL VOLTAGE NON–REVERSING STARTER
G	GREEN, GROUND
GALV	GALVANIZED
GEN	GENERATOR
GFI	GROUND FAULT INTERRUPTER
GFR	GROUND FAULT RELAY
GND	GROUND
HH	HANDHOLE
HID	HIGH INTENSITY DISCHARGE
HOA	HAND/OFF/AUTO
HOR	HAND/OFF/REMOTE
HPS	HIGH PRESSURE SODIUM
HVAC	HEATING, VENTILATING & AIR CONDITIONING
IC	INTERRUPTING CAPACITY
I & C	INSTRUMENTATION AND CONTROL
IMH	INSTRUMENTATION MANHOLE
INST	INSTANTANEOUS
IP	INSTRUMENT PANEL (PANELBOARD)
J, J–BOX	JUNCTION BOX
K	KEY INTERLOCK
KK	KIRK KEY INTERLOCK
LA	LIGHTNING ARRESTER
LC	LIGHTING CONTACTOR
LNCP	LIGHTING NETWORKED CONTROL PANEL
LP	LIGHTING PANEL (PANELBOARD)
LR	LOCAL/REMOTE, LATCHING RELAY
LS	LIMIT SWITCH
LT FLEX	LIQUID TIGHT FLEX CONDUIT
LTG	LIGHTING
M	MAGNETIC CONTACTOR COIL OR MOTOR
MA	MILLIAMPS

ABBREVIATIONS	DESCRIPTION
MCB	MAIN CIRCUIT BREAKER
MCC	MOTOR CONTROL CENTER
MDP	MAIN DISTRIBUTION PANEL
MERC	MERCURY VAPOR
MH	MOTOR HEATER, MANHOLE
MLO	MAIN LUGS ONLY
MPZ	MINI POWER ZONE
MS	MOTOR STARTER
MSC	MANUFACTURER SUPPLIED CABLE
MT	MOUNT
MTD	MOTOR TEMPERATURE DETECTOR
N	NEUTRAL
NC	NORMALLY CLOSED
NEMA	NATIONAL ELECTRIC MANUFACTURER'S ASSOCIATION
NO	NORMALLY OPEN
NP	NAMEPLATE
NTS	NOT TO SCALE
OL	OVERLOAD RELAY
P	POLE
PB	PULL BOX
PC	PHOTOCELL
PH	PHASE
PM	PHASE MONITOR,POWER METER
PMH	POWER MANHOLE
PNL	PANEL
PP	POWER PANEL (480VAC)
PPU	PUMP PROTECTION UNIT
PR	PAIR
PS	PRESSURE SWITCH
PT	POTENTIAL TRANSFORMER
PVC	POLYVINYL CHLORIDE CONDUIT
RCPT	RECEPTACLE
RMS	ROOT MEAN SQUARE
RS	RIGID STEEL CONDUIT
RGS	RIGID GALVANIZED STEEL CONDUIT
RTU	REMOTE TELEMETRY UNIT
SC	SURGE CAPACITOR
SF	SUPPLY FAN
SH	SPACE HEATER
S/N	SOLID NEUTRAL
SPD	SURGE PROTECTION DEVICE
SSRVS	SOLID STATE REDUCED VOLTAGE STARTER
SST	STAINLESS STEEL
SV	SOLENOID VALVE
SW	SWITCH
SWBD	SWITCHBOARD
SWGR	SWITCHGEAR
SYM	SYMMETRICAL
T	THERMOSTAT
TB	TERMINAL BOARD
TDR	TIME DELAY RELAY
TJB	TERMINAL JUNCTION BOX
TS	THERMAL SWITCH
TSP	TWISTED SHIELDED PAIR
TVSS	TRANSIENT VOLTAGE SURGE SUPPRESSION
TYP	TYPICAL
UVR	UNDER VOLTAGE RELAY
UPS	UNINTERRUPTIBLE POWER SUPPLY
V	VOLTMETER, VOLT
VFD	VARIABLE FREQUENCY DRIVE
VS	VOLTMETER SWITCH
W	WATT
WHD	WATTHOUR DEMAND METER
WP	WEATHERPROOF
XFMR	TRANSFORMER

ONE LINE DIAGRAMS, RISER DIAGRAMS AND SCHEMATICS

SYMBOL	DESCRIPTION
5	MOTOR, SQUIRREL CAGE INDUCTION UNLESS OTHERWISE NOTED – HORSEPOWER INDICATED
	OVERLOAD RELAY HEATER
1	MAGNETIC STARTER WITH NEMA SIZE INDICATED FVNR UNLESS INDICATED OTHERWISE.
M	MOTOR CIRCUIT PROTECTOR, MAGNETIC, 3 POLE UNLESS INDICATED OTHERWISE.
400	CIRCUIT BREAKER, THERMAL MAGNETIC TRIP SHOWN, 3 POLE UNLESS INDICATED OTHERWISE.
400 225	FUSED SWITCH, SWITCH AND FUSE CURRENT RATING INDICATED, 3 POLE UNLESS INDICATED OTHERWISE.
100	SWITCH – CURRENT RATING INDICATED, 3 POLE UNLESS INDICATED OTHERWISE.
400 600	DRAWOUT CIRCUIT BREAKER, LOW VOLTAGE 600= FRAME RATING, 400=TRIP SETTING
600 400	DRAWOUT FUSED SWITCH, LOW OR MEDIUM VOLTAGE 600= FRAME RATING, 400=FUSE RATING
(3)	CURRENT TRANSFORMER, NUMBER OF WINDINGS INDICATED
480–120 /208V 15 KVA, 3ø K–4 RATED	TRANSFORMER, VOLTAGES, PHASE AND RATING INDICATED AS APPLICABLE
	LIGHTNING ARRESTER
	CAPACITOR OR SURGE CAPACITOR
M	UTILITY METER
G	GENERATOR
X 0–600V	METER SCALE RANGE SHOWN IF REQUIRED A – AMPS, PM – PHASE MONITOR, V – VOLTS, P – POWER METER
	FUSE
SPD	SURGE PROTECTION DEVICE
	GROUND
CPT 120V	CONTROL TRANSFORMER
GFR	GROUND FAULT RELAY WITH C.T.
	PUSH–BUTTON SWITCH, MOMENTARY CONTACT, NORMALLY OPEN
	PUSH–BUTTON SWITCH, MOMENTARY CONTACT, NORMALLY CLOSED
	PUSH BUTTON SWITCH, MAINTAINED CONTACTS WITH MECHANICAL INTERLOCK
	REMOTE DEVICE
A	INDICATING LIGHT – LETTER INDICATES COLOR A – AMBER, G – GREEN B – BLUE, R – RED C – CLEAR, W – WHITE
A	PUSH TO TEST AND CONNECT INDICATING LIGHT SCHEMATIC DIAGRAMS ONLY A – AMBER, G – GREEN B – BLUE, R – RED C – CLEAR, W – WHITE

SYMBOL	DESCRIPTION
S_M	MANUAL MOTOR STARTER SWITCH, NEMA 4X UNLESS OTHERWISE NOTED. NUMBER OF POLES AS REQUIRED
S_{WP}	20 AMP SWITCH MOUNTED IN A WEATHERPROOF ENCLOSURE NUMBER OF POLES AS REQUIRED
PB 4X	PUSH–BUTTON STATION, NEMA 12 ENCLOSURE UNLESS INDICATED OTHERWISE. 4X = NEMA 4X STAINLESS STEEL ENCLOSURE. SEE CONTROL DIAGRAMS FOR TYPE PUSH BUTTON REQUIRED
30 4X	NONFUSED DISCONNECT SWITCH, SIZE INDICATED, 3 POLE UNLESS INDICATED OTHERWISE, NEMA 12 ENCLOSURE, 4X = NEMA 4X STAINLESS STEEL
F 40 60 4X	FUSED DISCONNECT SWITCH, SIZE INDICATED (60 = SWITCH RATING: 40 = FUSE RATING) 3 POLE UNLESS INDICATED OTHERWISE, NEMA 12 ENCLOSURE, 4X = NEMA 4X STAINLESS STEEL
LC 30 4X	LIGHTING CONTACTOR, CURRENT RATING INDICATED, NEMA 12 ENCLOSURE UNLESS INDICATED OTHERWISE. SEE CONTROL DIAGRAM FOR NUMBER OF POLES. 4X = NEMA 4X STAINLESS STEEL
2 4X	MAGNETIC STARTER, NEMA SIZE INDICATED, NEMA 12 ENCLOSURE, UNLESS INDICATED OTHERWISE. SEE CONTROL DIAGRAM. 4X = NEMA 4X STAINLESS STEEL
2 4X	COMBINATION (FUSE OR CIRCUIT BREAKER AS INDICATED). MAGNETIC STARTER, NEMA SIZE INDICATED, NEMA 12 ENCLOSURE UNLESS INDICATED OTHERWISE. SEE CONTROL SCHEMATIC DIAGRAM. 4X = NEMA 4X STAINLESS STEEL
	ELECTRIC RESISTANCE HEATER
CRX	CONTACT – NORMALLY OPEN WITH COIL INDICATED
CRX	CONTACT – NORMALLY CLOSED WITH COIL INDICATED
CRX	CONTROL RELAY, X=SEQUENTIAL NUMBER
LRX (L)	LATCHING RELAY, X=SEQUENTIAL NUMBER L – LATCH, U – UNLATCH
TDX NOTC	TIME DELAY RELAY, X=SEQUENTIAL NUMBER NOTC=NORMALLY OPEN TIMED CLOSED NOTO=NORMALLY OPEN TIMED OPEN AFTER CLOSE NCTO=NORMALLY CLOSED TIMED OPEN NCTC=NORMALLY CLOSED TIMED CLOSED AFTER OPEN
	TEMPERATURE
	OPENS ON RISING TEMPERATURE, CLOSES ON FALLING TEMPERATURE
	CLOSES ON RISING TEMPERATURE, OPENS ON FALLING TEMPERATURE
H O A XOO OOX	SELECTOR SWITCH: MAINTAINED CONTACT WITH CONTACT POSITION INDICATED, CHART IDENTIFIES OPERATION

	POSITION		
CKT.	HAND	OFF	AUTO
1	X	O	O
2	O	O	X

X – CLOSED CONTACT
O – OPEN CONTACT

GENERAL

SYMBOL	DESCRIPTION
	CONNECTION POINT TO EQUIPMENT SPECIFIED, FURNISHED AND INSTALLED UNDER OTHER SECTIONS. RACEWAY, CONDUCTOR AND CONNECTION IN THIS SECTION.
1"C,2#12,1#12G 1"C,1–25/C TYPE 1	INDICATES RACEWAY AND CIRCUIT CONDUCTORS. FIRST NUMBER IS RACEWAY SIZE. THE FOLLOWING NUMBERS ARE THE CONDUCTOR QUANTITIES, SIZES, AND TYPES.
	DEMOLITION OR TO BE REMOVED OR DELETED

LINE WEIGHT

NEW — EXISTING
FUTURE

NOTE:
THIS IS A STANDARD LEGEND SHEET. SOME SYMBOLS OR ABBREVIATIONS MAY APPEAR ON THIS SHEET AND NOT BE UTILIZED ON PROJECT.

TETRA TECH
www.tetratech.com
201 EAST PINE STREET, SUITE 1000
ORLANDO, FL 32801
PHONE: 407-839-3955 FAX: 407-839-3790

HILLERS ELECTRICAL ENGINEERING, INC.
23257 STATE ROAD 7, SUITE 100
BOCA RATON, FLORIDA 33428
(561) 451-9165
(561) 451-9166 FAX
LICENSE NO: EB 0006977

BID SET

MARK	DATE	DESCRIPTION	BY

Client: ORANGE COUNTY UTILITIES
Proj. Loc.: ORANGE COUNTY, FL
WESTERN REGIONAL WATER SUPPLY FACILITY
IMPROVEMENTS PHASE 3B

ELECTRIAL LEGEND AND SYMBOLS

Project No.:	200-10034-12003
Designed By:	TW
Drawn By:	TN
Checked By:	PFH

E001

Copyright: Tetra Tech

Thursday, August 23, 2018 5:56:04 PM DRAWING: E:\PROJECTS\TTT01D Western\PHASE-3B\DWG\SheetFiles\ELEC\TT01D3B-E001.DWG LAYOUT: E-1 USER NAME: WIN, THEIN

GENERAL NOTES AND SPECIFICATIONS:

1. THE SCOPE OF WORK SHALL BE AS PER SPECIFICATION SECTION 16010.
2. THE CONTRACTOR SHALL PROVIDE ALL MATERIALS AND LABOR TO INSTALL THE ELECTRICAL SYSTEMS AS INDICATED ON THE DRAWINGS. ITEMS NOT SHOWN BUT OBVIOUSLY NECESSARY FOR COMPLETION OF THE WORK SHALL BE INCLUDED.
3. THE INSTALLATION SHALL BE IN ACCORDANCE WITH THE NATIONAL ELECTRICAL CODE (NFPA 70), ELECTRICAL SAFETY IN THE WORKPLACE, LOCAL CODES AND FLORIDA BUILDING CODE WITH AMENDMENTS..
4. THE CONTRACTOR SHALL OBTAIN ALL NECESSARY PERMITS, INSPECTIONS AND APPROVALS AND TO INCLUDE ALL FEES AS PART OF HIS BID IF NOT OTHERWISE NOTED. THE FOLLOWING PERMITS ARE REQUIRED BY THE COUNTY AS A MINIMUM: POWER, LIGHTING, INSTRUMENTATION, LIGHTNING PROTECTION, FIBER OPTIC, LOW VOLTAGE, HIGH VOLTAGE, AND ELECTRICAL DEMOLITION.
5. THE CONTRACTOR SHALL COORDINATE HIS WORK WITH THE ENGINEER AND OWNER.
6. THE CONTRACTOR SHALL, BEFORE SUBMITTING HIS BID, VISIT THE SITE OF THE PROJECT AND BECOME FAMILIAR WITH THE EXISTING CONDITIONS. NO ALLOWANCE WILL BE MADE FOR EXISTING CONDITIONS OR FAILURE OF THE CONTRACTOR TO OBSERVE THEM.
7. IT IS THE CONTRACTOR'S RESPONSIBILITY TO COORDINATE WITH ALL LOCAL UTILITIES FOR ALL TEMPORARY UTILITIES FOR THE CONTRACTOR'S TRAILERS, INCLUDING THE POWER AND TELEPHONE UTILITIES TO MEET ALL OF THEIR INSTALLATION REQUIREMENTS. ALL FEES, LABOR, EQUIPMENT OR MATERIALS NECESSARY TO MEET THESE REQUIREMENTS IS TO BE INCLUDED IN THE BID. THE CONTRACTOR SHALL OBTAIN, DELIVER AND INSTALL ALL CONDUITS, PULL BOXES AND EQUIPMENT AS REQUIRED BY THE UTILITIES TO THEIR SPECIFICATIONS.
   PROGRESS ENERGY REPRESENTATIVE: (877) 342-5372.
8. ALL EQUIPMENT AND MATERIAL SHALL BE UNUSED AND U.L. LISTED. ALL REFERENCES TO A PARTICULAR MANUFACTURER ARE GIVEN ON AN "APPROVED EQUAL" BASIS, UNLESS OTHERWISE NOTED.
9. THE CONTRACTOR IS RESPONSIBLE TO TEST ALL SYSTEMS INSTALLED OR MODIFIED UNDER THIS PROJECT AND REPAIR OR REPLACE ALL DEFECTIVE WORK TO THE SATISFACTION OF THE ENGINEER AND OWNER.
10. ALL EQUIPMENT FURNISHED AND INSTALLED BY THE CONTRACTOR SHALL BE GUARANTEED AGAINST DEFECTS IN MATERIAL AND WORKMANSHIP FOR A PERIOD OF ONE YEAR FROM DATE OF ACCEPTANCE.
11. ALL CONDUCTORS SHALL BE COPPER. NO ALUMINUM ALLOWED UNLESS OTHERWISE NOTED.
12. SHOP DRAWINGS SHALL BE SUBMITTED FOR ALL ELECTRICAL & CONTROL EQUIPMENT AND MATERIAL.
13. ALL CONTROL PANELS SHALL BE CONSTRUCTED BY A UL 508A APPROVED PANEL VENDOR AND SHALL BEAR A UL 508A LABEL ON THE PANEL.
14. THE DRAWINGS ARE NOT INTENDED TO SHOW THE EXACT LOCATION OF CONDUIT RUNS. THESE ARE TO BE COORDINATED WITH THE OTHER TRADES SO THAT CONFLICTS ARE AVOIDED PRIOR TO INSTALLATIONS.
15. ALL LOCATIONS OF EQUIPMENT, PANELS ETC. ARE SHOWN FOR ILLUSTRATION PURPOSES. CONTRACTOR SHALL VERIFY AND COORDINATE EXACT LOCATION AND SIZE WITH ALL SUBCONTRACTORS AND EQUIPMENT SUPPLIERS PRIOR TO ANY INSTALLATION AND THEN INSTALL AS SUCH WITH CORRESPONDING CONDUIT STUB-UPS.
16. SEE OTHER DISCIPLINE DRAWINGS FOR COORDINATION OF ALL DRAWINGS. ANY CONFLICTS SHALL BE BROUGHT TO THE ENGINEER'S ATTENTION AND MOVEMENT OF CONDUITS OR OTHER ELECTRICAL EQUIPMENT SHALL BE ACCOMPLISHED WITHOUT ANY ADDITIONAL COST FOR THE OWNER.
17. LOCATIONS OF MANHOLES, HANDHOLES AND PULL BOXES ARE APPROXIMATE. CONTRACTOR SHALL COORDINATE EXACT LOCATION WITH EXISTING AND NEW PIPING OR CONDUIT AND ADJUST ACCORDINGLY.
18. NOT ALL CONDUITS SHOWN ON RISER AND ONE-LINE DIAGRAMS ARE SHOWN ON BUILDING LAYOUTS. CONTRACTOR SHALL SUPPLY ALL CONDUITS AND CABLES AS SHOWN ON RISER AND ONE-LINE DIAGRAMS.
19. ALL CIRCUITS SHALL BE IDENTIFIED IN JUNCTION BOXES, PULL BOXES, CONTROL PANELS, PANELBOARDS, LIGHTING POLES, CONTROLLERS AND SERVICE POINTS. IDENTIFICATION SHALL MATCH PANELBOARD SCHEDULES.
20. EXPOSED RUNS OF CONDUITS SHALL BE INSTALLED WITH RUNS PARALLEL OR PERPENDICULAR TO WALLS, STRUCTURAL MEMBERS OR INTERSECTIONS OF VERTICAL PLANES AND CEILINGS, WITH RIGHT ANGLE TURNS CONSISTING OF SYMMETRICAL BENDS OR PULL BOXES AS INDICATED ON THE DRAWINGS. BENDS AND OFFSETS SHALL BE AVOIDED WHERE POSSIBLE.
21. INSTRUMENTATION IS LOW VOLTAGE SIGNALS SUCH AS 4-20MA, 24 VDC COMMUNICATION, LOCAL AREA NETWORK COMMUNICATIONS, TELEPHONE COMMUNICATION, FIRE ALARM COMMUNICATION. POWER CONDUITS SHALL ONLY CROSS INSTRUMENTATION CONDUITS PERPENDICULARLY AT RIGHT ANGLES WITH 6" SEPARATION.
22. CONDUCTOR PULLING TENSIONS SHALL NOT EXCEED MANUFACTURER'S RECOMMENDATION. CONTRACTOR SHALL INSTALL PULL BOXES TO MEET MANUFACTURER'S REQUIREMENTS.
23. MINIMUM DISTANCE ALLOWED BETWEEN POWER CONDUITS AND INSTRUMENTATION CONDUITS SHALL BE:

VOLTAGE	DISTANCE
4160V	3 FT
480V	2 FT
120V	1 FT

24. THE CONTRACTOR SHALL BE RESPONSIBLE FOR ALL CONDUIT AND WIRING INSTALLATION FOR ALL VENDOR PROVIDED EQUIPMENT (PACKAGE SYSTEMS). IF THE SHOP DRAWINGS DIFFER FROM THE DESIGNED FACILITIES, THE CONTRACTOR SHALL REDESIGN THE FACILITIES AND SUBMIT THE REVISED DESIGN FOR THE ENGINEER'S APPROVAL ALONG WITH THE SHOP DRAWINGS. THERE SHALL BE NO ADDITIONAL COST TO THE OWNER FOR THE REDESIGN NOR FOR ANY ADDITIONAL CONDUITS AND WIRING. DURING SUBMITTAL THE CONTRACTOR SHALL VERIFY ALL SUPPLIED BREAKER SIZES FOR ALL PACKAGED SYSTEMS SUCH AS HVAC, EXHAUST FANS, MIXERS, CHEMICAL PUMPS ETC. AND MODIFY ALL BREAKERS IN MCC'S AND PANELBOARDS ACCORDINGLY WITHOUT ANY ADDITIONAL COST TO THE OWNER.
25. ALL EXCAVATIONS FOR CONDUITS, HAND HOLES, MANHOLES AND PULL BOXES NEAR EXISTING PIPING, CONDUIT AND EQUIPMENT SHALL BE HAND EXCAVATED AND COORDINATED WITH PLANT ENGINEER.
26. MINIMUM DEPTH FROM TOP OF DUCT BANKS OR CONDUITS TO FINISHED GRADE SHALL BE 24" UNLESS OTHERWISE NOTED.
27. COLORED WARNING TAPE 6" WIDE SHALL BE INSTALLED DIRECTLY ABOVE ALL UNDERGROUND YARD CONDUITS ACCORDING TO THE FOLLOWING SCHEDULE:
    POWER: RED
    ALL OTHER CONDUITS: GREEN
28. CONTRACTOR SHALL RESTORE SIDEWALKS, ROADWAYS, SOD AND SPRINKLER SYSTEM PIPING TO MATCH EXISTING, AFTER THE COMPLETION OF THE CONDUIT AND PULL BOX INSTALLATION AND OTHER ELECTRICAL INSTALLATION.
29. GROUNDING SHALL BE INSTALLED IN ACCORDANCE WITH NEC, ARTICLE 250. THE GROUNDING SYSTEM TEST SHALL NOT EXCEED A 48 HOUR SPAN DRY RESISTANCE OF 5 OHMS. ADDITIONAL GROUNDING TO MEET THIS REQUIREMENT SHALL BE INSTALLED AT NO EXTRA COST. GROUNDING AND BONDING CONNECTIONS SHALL NOT BE PAINTED. ALL GROUNDING CONNECTIONS SHALL BE EXOTHERMIC WELDED UNLESS SPECIFICALLY INDICATED OTHERWISE. GROUND SYSTEM SHALL BE TESTED AND WITNESSED BY THE COUNTY.
30. AN EQUIPMENT GROUND WIRE SIZED PER NEC SHALL BE PULLED IN ALL ELECTRICAL CONDUITS, POWER AND CONTROL, WHETHER OR NOT INDICATED ON THE PLANS.
31. ALL ENCLOSURES, TJB, WIREWAY, PULL BOXES ETC. SHALL CONTAIN A GROUNDING BUS. CONNECT ALL RACEWAY BONDS TO THIS BUS VIA GROUNDING BUSHING AND EXTEND BONDING JUMPER FROM THIS BUS TO THE ENCLOSURE.
32. PRIMARY BUILDING GROUNDING SHALL BE AN EMBEDDED GRID OF MINIMUM #4/0 AWG BARE TINNED COPPER WIRE INSTALLED IN THE FOUNDATION AND AROUND THE BUILDING PERIMETER, MINIMUM 30" BELOW FINISHED GRADE TO FORM A COMPLETE LOOP. SECONDARY GROUND CONNECTIONS TO ALL METAL EQUIPMENT, HAND RAILS, STRUCTURAL STEEL, CONCRETE PADS, REBAR ETC. SHALL HAVE A MINIMUM #4 STRANDED BARE TINNED COPPER CONDUCTOR BONDED USING APPROVED LUGS OR EXOTHERMIC CONNECTIONS. ALL EQUIPMENT GROUNDING CONDUCTORS PENETRATING CONCRETE SLABS OR FINISHED GRADE SHALL HAVE A 72" CONDUCTOR PIGTAIL AT EACH LOCATION FOR CONNECTION TO EQUIPMENT.
33. ALL YARD CONDUIT (YC) SHALL BE CONCRETE ENCASED WITH RED DYE ON TOP OF CONCRETE AND COLORED WARNING TAPE 12-INCH ABOVE DUCTBANK AS PER ELECTRICAL DETAILS.
34. ALL CONCRETE DUCT BANKS SHALL CARRY A MINIMUM #4/0 AWG BARE TINNED COPPER GROUND WIRE, OVER THE ENTIRE LENGTH, WHICH SHALL BE CONNECTED TO THE SITE GROUNDING GRID AND GROUND RODS LOCATED CONNECTING MANHOLES, HAND HOLES OR PULL BOXES.
35. CONTRACTOR SHALL CORE DRILL EXISTING CONCRETE WALLS, FLOORS, MANHOLES, HAND HOLES AND PULL BOXES FOR CONDUIT PENETRATIONS. SEAL PENETRATIONS WITH NON-SHRINK GROUT OR APPROPRIATE FIRE RATED DEVICES WHERE APPLICABLE.
36. ALL CONDUITS PENETRATING RATED FIRE WALLS OR RATED FIRE FLOORS SHALL BE INSTALLED WITH U.L. APPROVED DEVICES TO MAINTAIN THE FIRE RATING OF THE WALL OR FLOOR PENETRATED.
37. PROVIDE CONDUIT DUCT SEAL AT ALL CONDUIT ENDS.
38. ALL SPARE CONDUITS SHALL BE SEALED WITH A CAP AT BOTH ENDS AND A PULL STRING INSTALLED WITH IDENTIFICATION ON BOTH ENDS.
39. ALL RECEPTACLES SHALL BE INSTALLED 18" AFF UNLESS OTHERWISE NOTED. LIGHT SWITCHES SHALL BE MOUNTED 48" AFF UNLESS OTHERWISE NOTED.
40. ALL RECEPTACLES WITHIN 6' OF A SINK SHALL BE GFI.
41. FLEXIBLE CONDUITS SHALL BE USED TO TERMINATE ALL MOTORS AND OTHER VIBRATING EQUIPMENT AND SHALL BE BETWEEN 18" AND 3' IN LENGTH.
42. ELECTRICAL PULL BOXES SHALL BE SUPPLIED WITH A TRAFFIC-RATED COVER MARKED "ELECTRICAL" OR "SIGNAL" AS PER DETAILS.
43. TYPEWRITTEN PANEL SCHEDULES SHALL BE INSTALLED IN EACH PANELBOARD, AND TYPEWRITTEN TERMINAL BLOCK SCHEDULES IN EACH CONTROL CABINET.
44. ALL MATERIAL IN DESIGNATED CORROSIVE AREAS SHALL BE NEMA 4X STAINLESS STEEL OR NON-METALLIC. ONLY USE NON-METALLIC WHERE SHOWN.
45. ALL OUTDOOR LIGHTING FIXTURES SHALL BE OF COPPER FREE CONSTRUCTION.
46. CONTRACTOR SHALL BALANCE PANELBOARD LOADS AT THE END OF THE PROJECT AND ADJUST PANELBOARD SCHEDULE ACCORDINGLY.
47. ALL REFERENCES TO 4X, NEMA 4X, OR NEMA 4X STAINLESS STEEL SHALL BE CONSTRUED AS MEANING NEMA 4X 316 STAINLESS STEEL.
48. PROVIDE RECORD DRAWINGS, INCLUDING SINGLE LINE DIAGRAM AND FLOOR PLANS INDICATING LOCATION AND AREA SERVED FOR ALL DISTRIBUTION, TO THE OWNER WITHIN 30 DAYS OF SYSTEM ACCEPTANCE AS REQUIRED BY FLORIDA BUILDING CODE.
49. PROVIDE OPERATING MANUALS TO THE OWNER AS REQUIRED BY FLORIDA BUILDING CODE. THE OPERATING MANUAL AND MAINTENANCE MANUAL SHALL INCLUDE THE MINIMUM REQUIREMENTS AS STATED IN FLORIDA BUILDING CODE.
50. THE MAXIMUM VOLTAGE DROP FOR BRANCH CIRCUIT CONDUCTORS SHALL BE 3% PER FLORIDA BUILDING CODE AND NEC.
51. ALL VERTICAL CONDUIT PENETRATIONS FROM CONCRETE SLAB SHALL HAVE A MAINTENANCE PAD TO PREVENT CORROSION.
52. ALL OUTDOOR ELECTRICAL PANEL, BOXES, ENCLOSURES, ETC. SHALL BE 316 STAINLESS STEEL WITH POWERED COATED WHITE, UNLESS OTHERWISE NOTED.

TETRA TECH
www.tetratech.com
201 EAST PINE STREET, SUITE 1000
ORLANDO, FL 32801
PHONE: 407-839-3955 FAX: 407-839-3790

HILLERS ELECTRICAL ENGINEERING, INC.
23257 STATE ROAD 7, SUITE 100
BOCA RATON, FLORIDA 33428
(561) 451-9165
(561) 451-9166 FAX
LICENSE No: EB 0006977

BID SET

MARK	DATE	DESCRIPTION	BY

Client: ORANGE COUNTY UTILITIES
Proj. Loc.: ORANGE COUNTY, FL

WESTERN REGIONAL WATER SUPPLY FACILITY
IMPROVEMENTS PHASE 3B

ELECTRICAL NOTES

Project No.:	200-10034-12003
Designed By:	TW
Drawn By:	TN
Checked By:	PFH

E002

Copyright: Tetra Tech

Thursday, August 23, 2018 5:56:09 PM DRAWING: E:\PROJECTS\TTT\T01D Western\PHASE-3B\DWG\SheetFiles\ELECTT01D3B-E002.DWG LAYOUT: E-2 USER NAME: WIN, THEIN

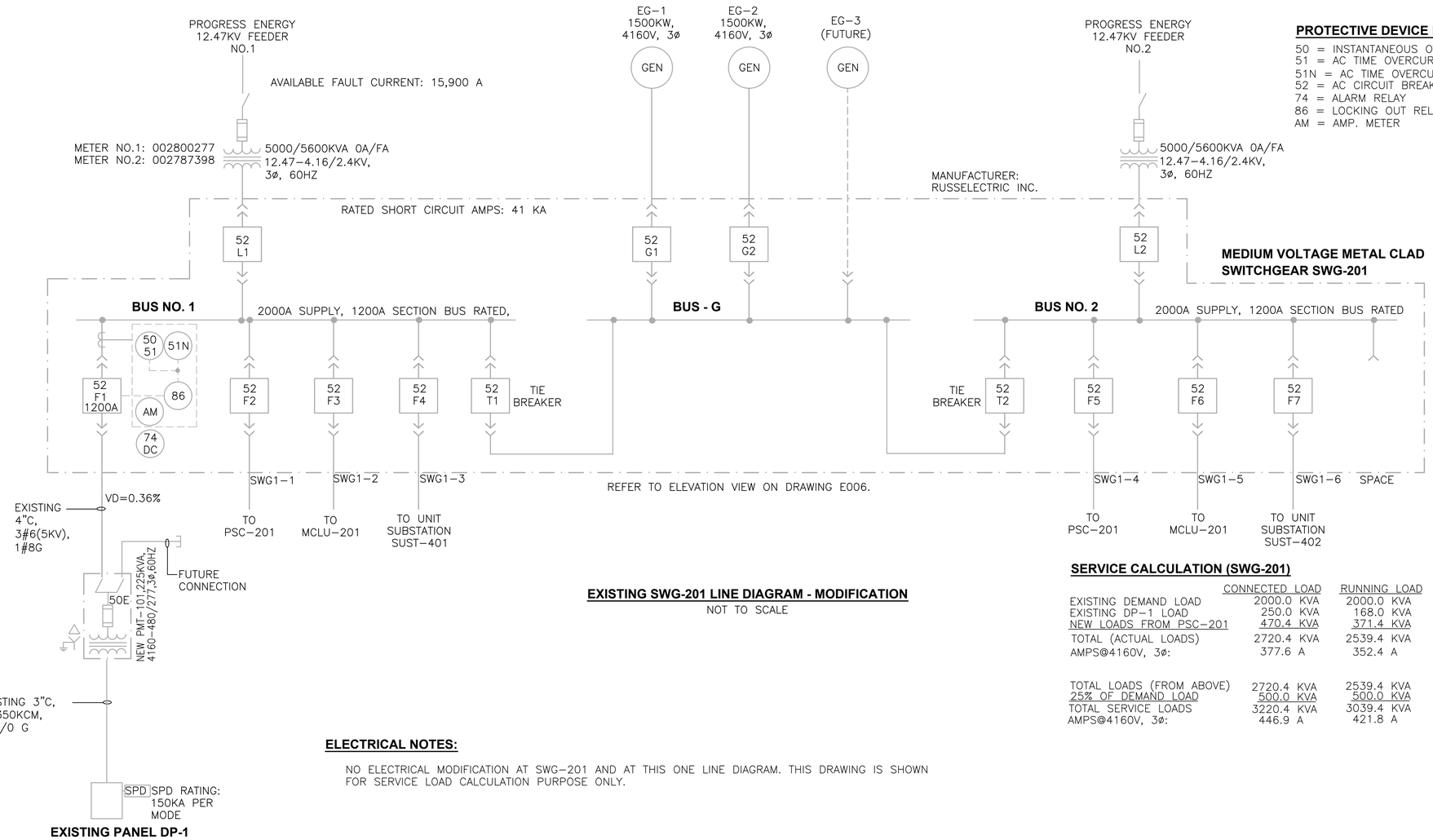

EXISTING SWG-201 LINE DIAGRAM - MODIFICATION

NOT TO SCALE

PROTECTIVE DEVICE LEGEND

50 = INSTANTANEOUS OVERCURRENT RELAY
51 = AC TIME OVERCURRENT RELAY
51N = AC TIME OVERCURRENT RELAY FOR NETURAL
52 = AC CIRCUIT BREAKER
74 = ALARM RELAY
86 = LOCKING OUT RELAY
AM = AMP. METER

SERVICE CALCULATION (SWG-201)

	CONNECTED LOAD	RUNNING LOAD
EXISTING DEMAND LOAD	2000.0 KVA	2000.0 KVA
EXISTING DP–1 LOAD	250.0 KVA	168.0 KVA
NEW LOADS FROM PSC–201	470.4 KVA	371.4 KVA
TOTAL (ACTUAL LOADS)	2720.4 KVA	2539.4 KVA
AMPS@4160V, 3ø:	377.6 A	352.4 A
TOTAL LOADS (FROM ABOVE)	2720.4 KVA	2539.4 KVA
25% OF DEMAND LOAD	500.0 KVA	500.0 KVA
TOTAL SERVICE LOADS	3220.4 KVA	3039.4 KVA
AMPS@4160V, 3ø:	446.9 A	421.8 A

ELECTRICAL NOTES:

NO ELECTRICAL MODIFICATION AT SWG–201 AND AT THIS ONE LINE DIAGRAM. THIS DRAWING IS SHOWN FOR SERVICE LOAD CALCULATION PURPOSE ONLY.

TETRA TECH
www.tetratech.com
201 EAST PINE STREET, SUITE 1000
ORLANDO, FL 32801
PHONE: 407-839-3955 FAX: 407-839-3790

HILLERS ELECTRICAL ENGINEERING, INC.
23257 STATE ROAD 7, SUITE 100
BOCA RATON, FLORIDA 33428
(561) 451-9165
(561) 451-9185 FAX
LICENSE NO: EB 0006977

BID SET

MARK	DATE	DESCRIPTION	BY

Client: ORANGE COUNTY UTILITIES
Proj. Loc.: ORANGE COUNTY, FL

WESTERN REGIONAL WATER SUPPLY FACILITY
IMPROVEMENTS PHASE 3B

SWG-201 ONE LINE DIAGRAM

Project No.:	200-10034-12003
Designed By:	TW
Drawn By:	TN
Checked By:	PFH

E003

Copyright: Tetra Tech

Thursday, August 23, 2018 5:56:15 PM DRAWING: E:\PROJECTS\TT\TT01D Western\PHASE-3B\DWG\SheetFiles\ELEC\TT01D3B-E003.DWG LAYOUT: LAYOUT(1) USER NAME: WIN, THEIN

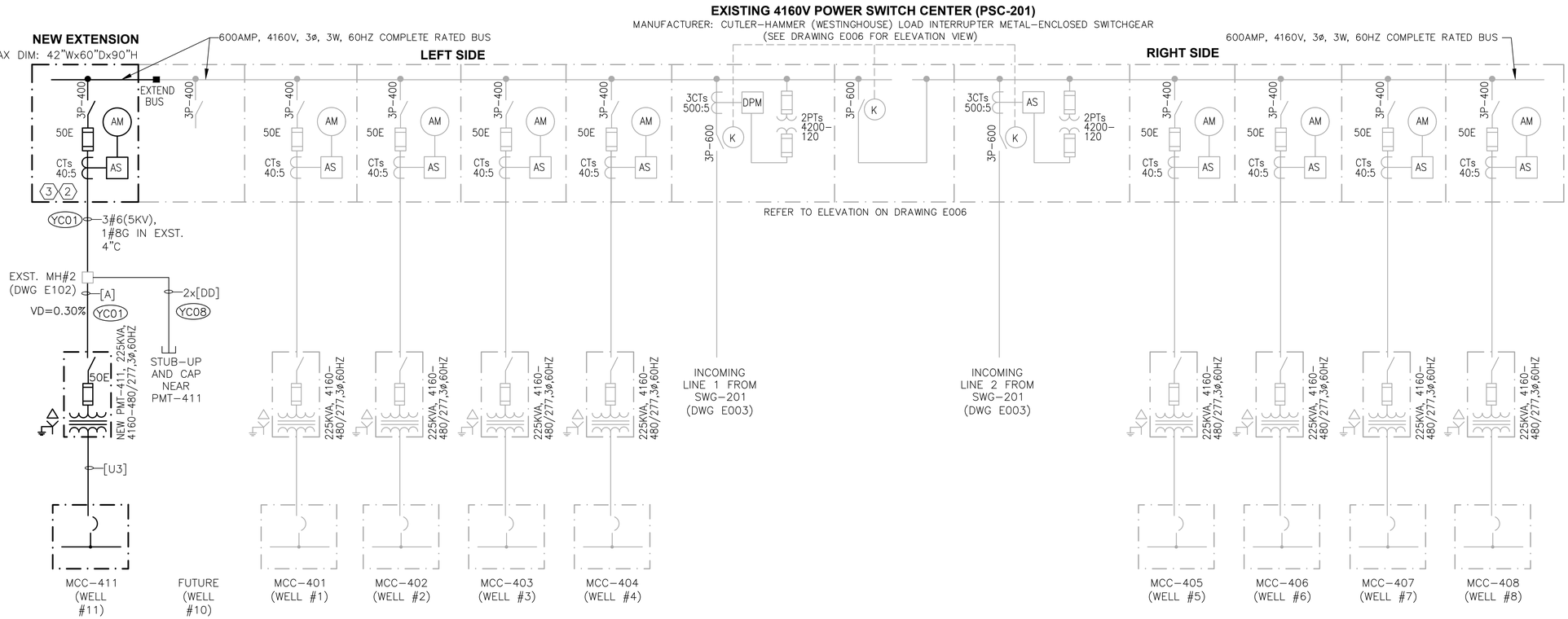

EXISTING PSC-201 - MODIFIED ONE LINE DIAGRAM

NOT TO SCALE

MAXIMUM DIMENSIONS: 60"W x 90"H x 20"D
MAIN BREAKER: YES
ACCESSIBILITY: FRONT AND SIDES
U.L. SERVICE ENTRANCE RATED: NO
LOCATION: NEW WELL#11 BUILDING

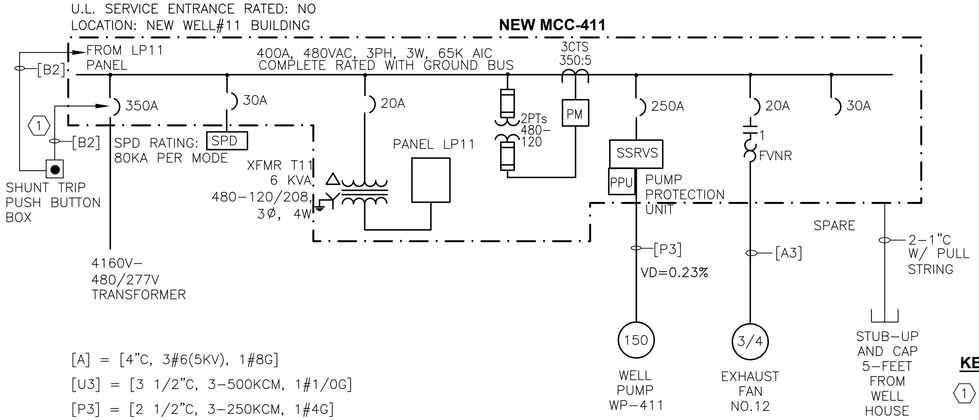

[A] = [4"C, 3#6(5KV), 1#8G]
[U3] = [3 1/2"C, 3-500KCM, 1#1/0G]
[P3] = [2 1/2"C, 3-250KCM, 1#4G]
[A3] = [3/4"C, 3#12, 1#12G]
[DD] - [4"C EMPTY W/ PULL STRING]
[B2] - [3/4"C, 2#12, 1#12G]

TYPICAL WELL-411 ONE LINE DIAGRAM

NOT TO SCALE

LOAD CALCULATION (PSC-201) @ 4160V, 3-PHASE

(* = NEW LOADS OR FUTURE LOADS)

LEFT SIDE

	CONNECTED LOAD	RUNNING LOAD
EXISTING MCC-401	156.8 KVA	123.8 KVA
EXISTING MCC-402	156.8 KVA	123.8 KVA
EXISTING MCC-403	131.8 KVA	103.8 KVA
EXISTING MCC-404	131.8 KVA	103.8 KVA
FUTURE MCC-410*	156.8 KVA	123.8 KVA
NEW MCC-411*	156.8 KVA	123.8 KVA
TOTAL LEFT SIDE LOADS	890.8 KVA	702.8 KVA
AMPS@4160V, 3ø:	123.6 A	97.5 A

LEFT SIDE

	CONNECTED LOAD	RUNNING LOAD
EXISTING MCC-405	156.8 KVA	123.8 KVA
EXISTING MCC-406	156.8 KVA	123.8 KVA
EXISTING MCC-407	131.8 KVA	103.8 KVA
EXISTING MCC-408	131.8 KVA	103.8 KVA
FUTURE MCC-409*	156.8 KVA	123.8 KVA
TOTAL RIGHT SIDE LOADS	734.0 KVA	579.0 KVA
AMPS@4160V, 3ø:	101.9 A	80.4 A

COMBINED OF LEFT AND RIGHT SIDE

LEFT SIDE LOADS - PSC-201	890.8 KVA	720.8 KVA
RIGHT SIDE LOADS - PSC-201	734.0 KVA	579.0 KVA
TOTAL COMBINED LOADS	1624.8 KVA	1299.8 KVA
AMPS@4160V, 3ø:	225.5 A	180.4 A

LOAD CALCULATION (MCC-11)

FOR CALCULATION PURPOSES, 1HP=1KVA @ 480V, 3-PHASE

	CONNECTED LOAD	RUNNING LOAD
XFMR T11, LP11	6.0 KVA	3.0 KVA
NEW WELL PUMP WP-411	150.0 KVA	120.0 KVA
NEW EXHAUST FAN	0.8 KVA	0.8 KVA
TOTAL (ACTUAL LOADS)	156.8 KVA	123.8 KVA
AMPS@480V, 3ø:	188.6 A	148.9 A

KEYED NOTES:

1. CONTRACTOR SHALL PROVIDE AND INSTALL NEMA 4X RATED BREAK GLASS STATION FOR SHUNT TRIP FOR WELL#11. COORDINATE WITH MCC SUPPLIER FOR THE VOLTAGE REQUIREMENT OF THE SHUT TRIP AND PROVIDE BREAK GLASS STATION ACCORDINGLY.
2. NEW EXTENSION SECTION FOR WELL NO.11 SHALL BE BOTTOM ENTRY AND COORDINATE WITH EXISTING CONDUIT STUB-UP LOCATIONS.
3. CONTRACTOR SHALL PROVIDE AND INSTALL NEW POWER SWITCH CENTER EXTENSION SECTION FOR EXISTING 4160V PSC-201. NEW EXTENSION SECTION SHALL BE FROM CUTLER-HAMMER (EATON) TO MAINTAIN THE UL RATING OF THE ASEMBLY. EXTEND EXISTING BUS AT PSC-201 TO NEW EXTENSION SECTION AND PROVIDE ALL NECESSARY HARDWARE FOR CONNECTION. NEW SECTION SHALL INCLUDE A MINIMUM OF MV SWITCHES, FUSES, AMMETER WITH CT'S, ETC. TO MATCH EXISTING SECTIONS. MAKE ALL NECESSARY CONNECTIONS, TERMINATIONS, MODIFICATIONS, ETC. FOR A COMPLETE AND WORKING PSC ASSEMBLY IN PLACE. REFER TO DRAWING E005 FOR PSC-201 ELEVATION AND ADDITIONAL INFORMATION.

TETRA TECH
www.tetratech.com
201 EAST PINE STREET, SUITE 1000
ORLANDO, FL 32801
PHONE: 407-839-3955 FAX: 407-839-3790

HILLERS ELECTRICAL ENGINEERING, INC.
23257 STATE ROAD 7, SUITE 100
BOCA RATON, FLORIDA 33428
(561) 451-9165
(561) 451-9885 FAX
LICENSE NO: EB 0006977

BID SET

MARK	DATE	DESCRIPTION	BY

Client: ORANGE COUNTY UTILITIES
Proj. Loc.: ORANGE COUNTY, FL

WESTERN REGIONAL WATER SUPPLY FACILITY
IMPROVEMENTS PHASE 3B

PSC-201 ONE LINE DIAGRAM

Project No.:	200-10034-12003
Designed By:	TW
Drawn By:	TN
Checked By:	PFH

E004

Copyright: Tetra Tech

Thursday, August 23, 2018 5:56:20 PM DRAWING: E:\PROJECTS\TTT\TT01D Western\PHASE-3B\DWG\SheetFiles\ELECTT01D3B-E004.DWG LAYOUT: LAYOUT(1) USER NAME: WIN, THEIN

MANUFACTURER: WESTINGHOUSE
BUILT, ORDER# PTA00631
DWG# SM971A36 A01 G01
SWITCH STYLE: SM93A198G03
600A, 4.8KVA RATED
LOCATION: HSP – ELECTRICAL ROOM

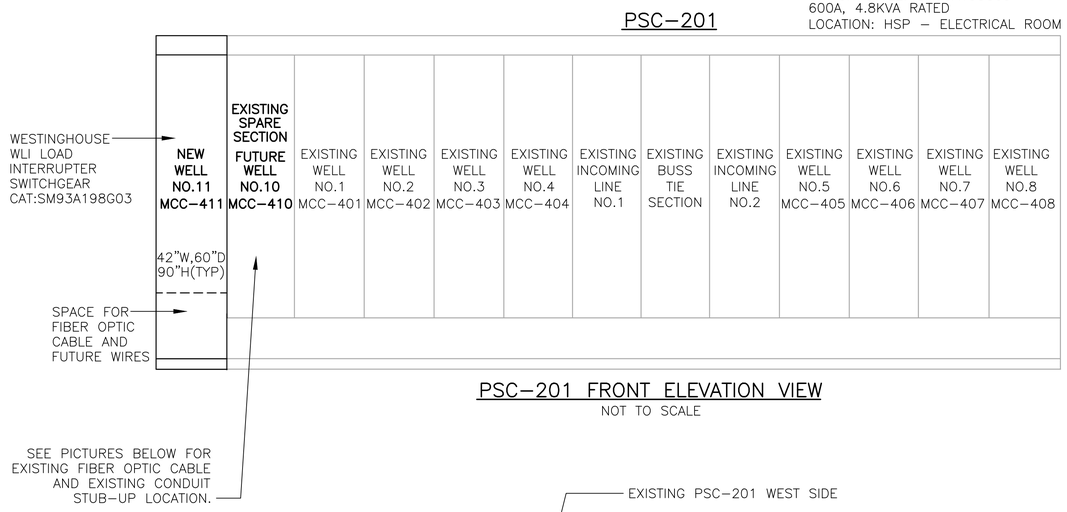

PSC–201 FRONT ELEVATION VIEW
NOT TO SCALE

PICTURE 1: PSC–201 WEST SECTION ELEVATION VIEW
NOT TO SCALE

PICTURE 1A: ENLARGED VIEW OF CONDUIT STUB–UP
NOT TO SCALE

TETRA TECH
www.tetratech.com
201 EAST PINE STREET, SUITE 1000
ORLANDO, FL 32801
PHONE: 407-839-3955 FAX: 407-839-3790

HILLERS ELECTRICAL ENGINEERING, INC.
23257 STATE ROAD 7, SUITE 100
BOCA RATON, FLORIDA 33428
(561) 451-9165
(561) 451-9185 FAX
LICENSE NO: EB 0006977

BID SET

MARK	DATE	DESCRIPTION	BY

Client: ORANGE COUNTY UTILITIES
Proj. Loc.: ORANGE COUNTY, FL
WESTERN REGIONAL WATER SUPPLY FACILITY
IMPROVEMENTS PHASE 3B
ELEVATION DIAGRAMS

Project No.:	200-10034-12003
Designed By:	TW
Drawn By:	TN
Checked By:	PFH

E005

Copyright: Tetra Tech

Thursday, August 23, 2018 5:56:24 PM DRAWING: E:\PROJECTS\TTTT01D Western\PHASE-3B\DWG\SheetFiles\ELEC\TT01D3B-E005.DWG LAYOUT: E005 USER NAME: WIN, THEIN

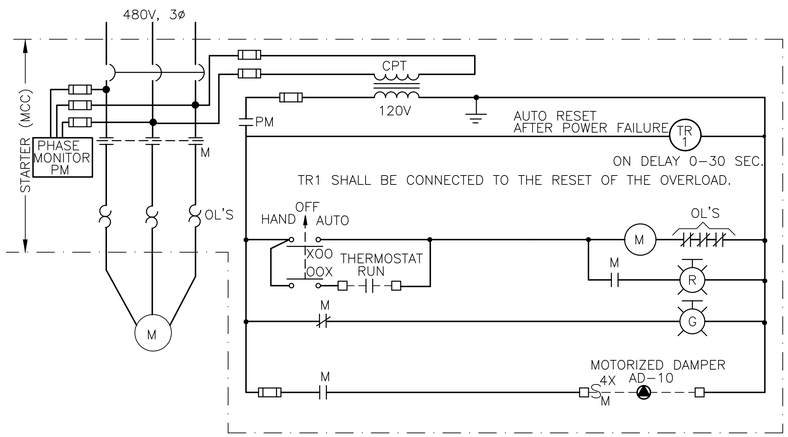

FURNISH AND INSTALL PHASE MONITOR RELAY (EATON: D65VMLP OR EQUAL) IN THE WELL EXHAUST FAN STARTER. SIZE CPT AS REQUIRED FOR MOTORIZED DAMPER LOAD.

WELL 11 EXHAUST FAN (EF–10) SCHEMATIC

NOT TO SCALE

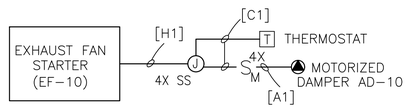

NOTE: PROVIDE AND INSTALL MOTOR RATED SWITCH (NEMA 4X) NEAR EACH MOTORIZED DAMPER.

WELL 11 EXHAUST FAN (EF–10) RISER

NOT TO SCALE

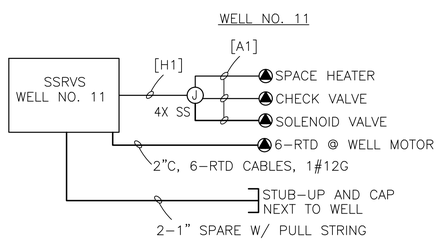

WELL NO. 11 RISER

NOT TO SCALE

NOTE

1. COORDINATE WITH PUMP MANUFACTURER FOR MOTOR AND PUMP PROTECTION UNITS (PPU UNIT) REQUIREMENTS BEFORE BIDDING AND PROVIDE ACCORDINGLY. PROVIDE POWER FOR SENSING RELAYS FOR MOISTURE SENSORS, MOTOR AND BEARING TEMPERATURE SENSORS/RTD. PROVIDE AND INSTALL ALL NECESSARY TRANSDUCERS, CT'S, PT'S, ETC. FOR A COMPLETE AND WORKING SSRVS SYSTEM IN PLACE. ADJUST THE CONTROL SCHEMATIC AND CONDUIT/CABLE AS REQUIRED TO PROVIDE THE FUNCTION REQUIRED BY THE PUMP MANUFACTURER FOR THE PROTECTION OF THE PUMP AND MOTOR. SIZE CPT AS REQUIRED FOR LOADS SHOWN.

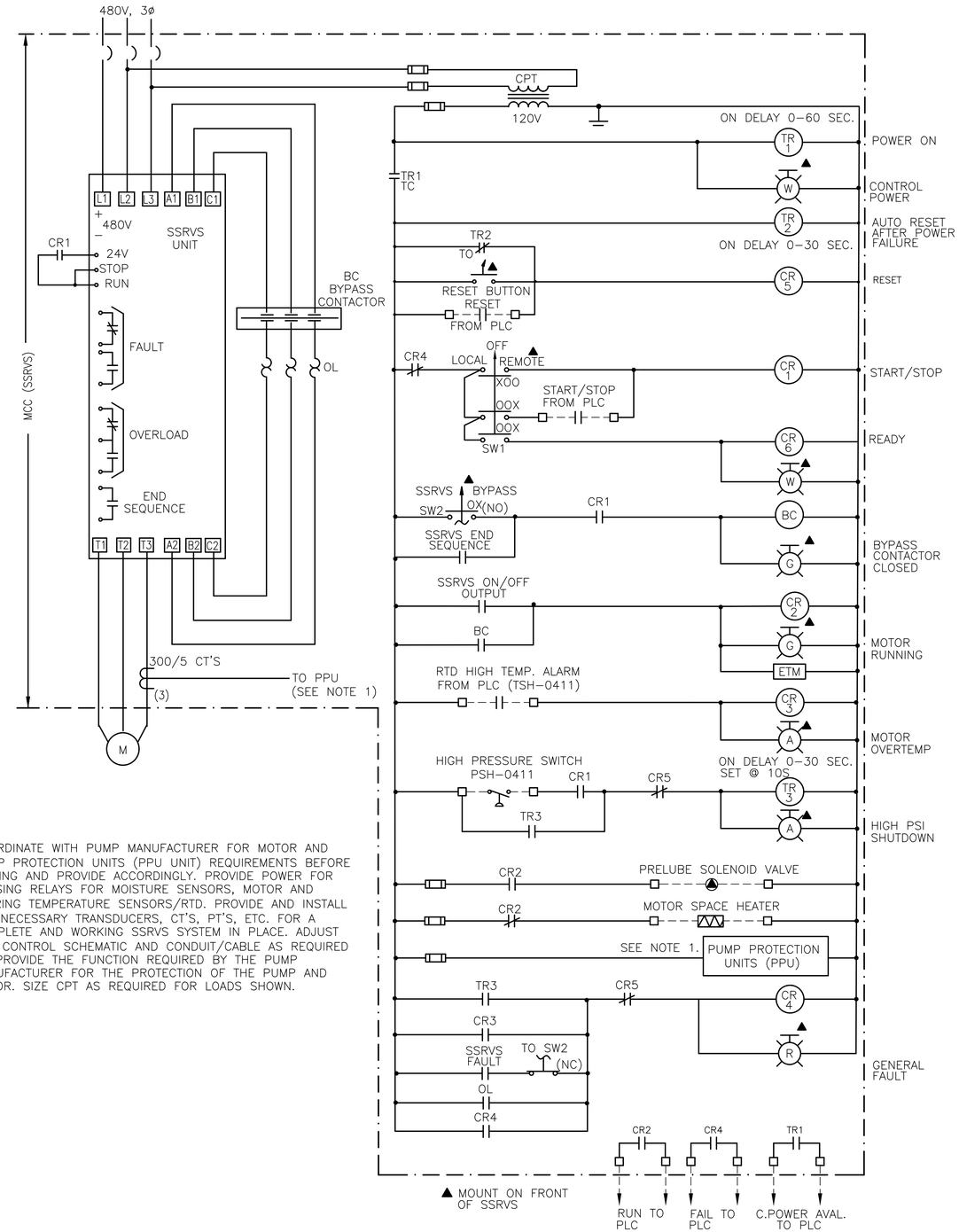

SSRVS SCHEMATIC FOR WELL NO. 11

NOT TO SCALE

TETRA TECH
www.tetratech.com
201 EAST PINE STREET, SUITE 1000
ORLANDO, FL 32801
PHONE: 407-839-3955 FAX: 407-839-3790

HILLERS ELECTRICAL ENGINEERING, INC.
23257 STATE ROAD 7, SUITE 100
BOCA RATON, FLORIDA 33428
(561) 451-9165
(561) 451-9166 FAX
LICENSE NO: EB 0006977

BID SET

MARK	DATE	DESCRIPTION	BY

Client: ORANGE COUNTY UTILITIES
Proj. Loc.: ORANGE COUNTY, FL

WESTERN REGIONAL WATER SUPPLY FACILITY
IMPROVEMENTS PHASE 3B

SCHEMATIC DIAGRAMS

Project No.:	200-10034-12003
Designed By:	TW
Drawn By:	TN
Checked By:	PFH

E006

Copyright: Tetra Tech

Thursday, August 23, 2018 5:56:29 PM DRAWING: E:\PROJECTS\TTI\TT01D Western\PHASE-3B\DWG\SheetFiles\ELEC\TT01D3B-E006.DWG LAYOUT: LAYOUT(1) USER NAME: WIN, THEIN

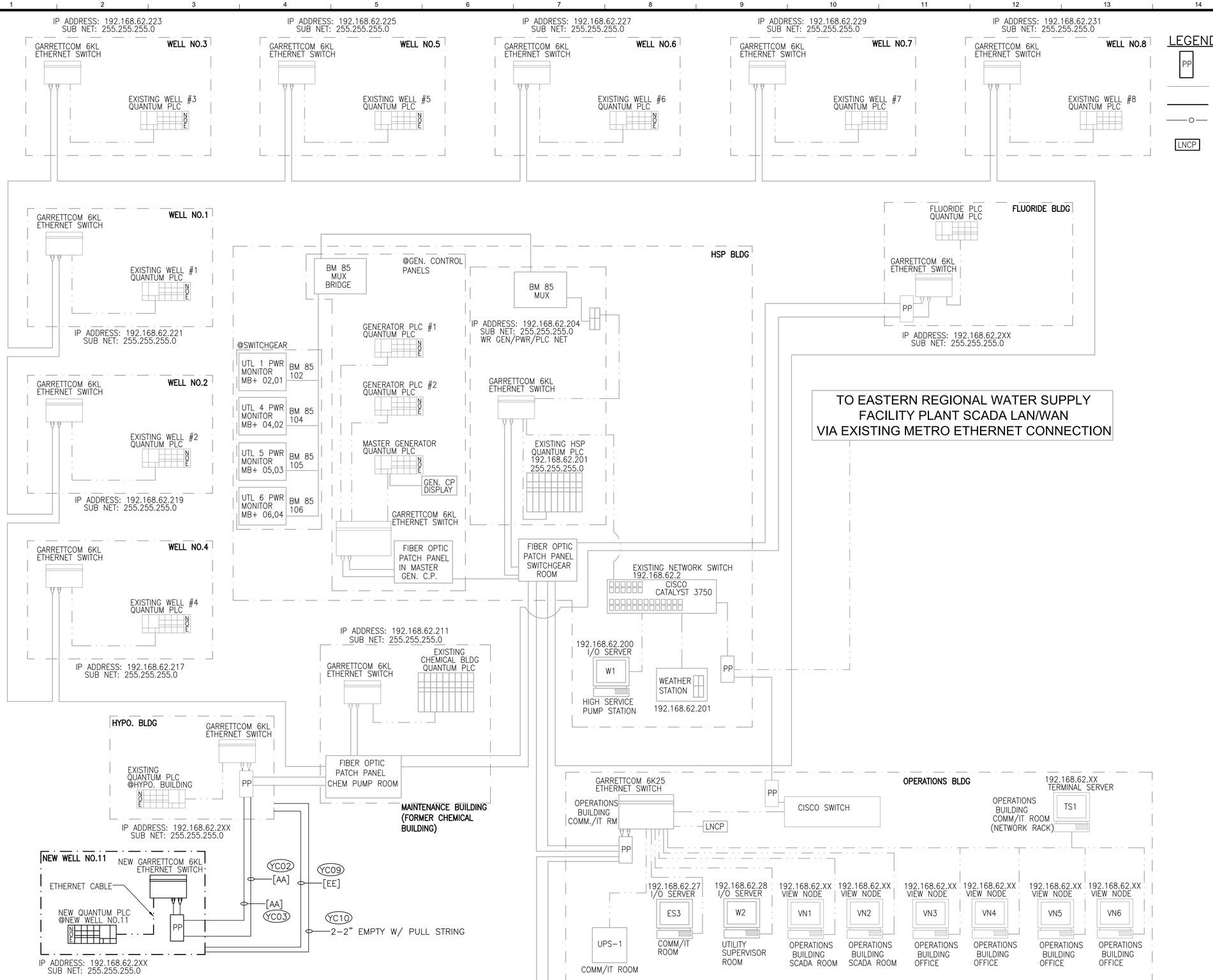

FIBER OPTIC COMMUNICATION RISER

NOT TO SCALE

NOTE: SEE DWG E008 FOR CIRCUIT SCHEDULE.

LEGEND:

- PP – PATCH PANEL
- EXISTING
- NEW
- FIBER OPTIC CABLE (BY I&C SUPPLIER)
- LNCP – LIGHTING NETWORKED CONTROL PANEL

TETRA TECH
www.tetratech.com
201 EAST PINE STREET, SUITE 1000
ORLANDO, FL 32801
PHONE: 407-839-3955 FAX: 407-839-3790

HILLERS ELECTRICAL ENGINEERING, INC.
23257 STATE ROAD 7, SUITE 100
BOCA RATON, FLORIDA 33428
(561) 451-9165
(561) 451-9166 FAX
LICENSE NO: EB 0006977

BID SET

MARK	DATE	DESCRIPTION	BY

Client: ORANGE COUNTY UTILITIES
Proj. Loc.: ORANGE COUNTY, FL

WESTERN REGIONAL WATER SUPPLY FACILITY IMPROVEMENTS PHASE 3B

FIBER OPTIC COMMUNICATION RISER

Project No.:	200-10034-12003
Designed By:	TW
Drawn By:	TN
Checked By:	PFH

E007

Copyright: Tetra Tech

Thursday, August 23, 2018 5:56:34 PM DRAWING: E:\PROJECTS\TTTT01D Western\PHASE-3B\DWG\SheetFiles\ELEC\TT01D3B-E007.DWG LAYOUT: LAYOUT(1) USER NAME: WIN, THEIN

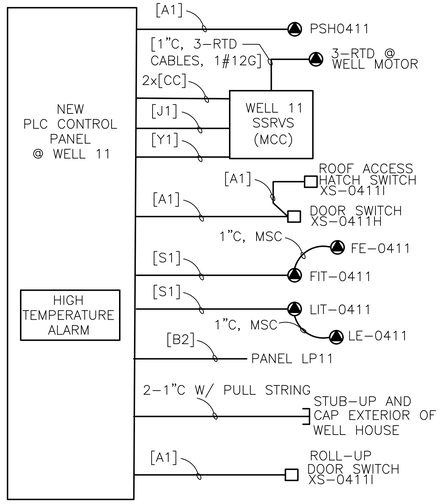

WELL 11 PLC PANEL RISER

NOT TO SCALE

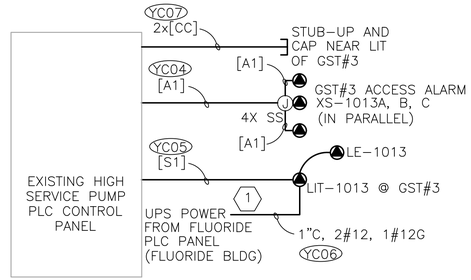

HSP PLC PANEL PARTIAL RISER

NOT TO SCALE

KEYED NOTE:

1. CONTRACTOR SHALL PROVIDE AND INSTALL A 20A RATED RECEPTACLE PLUG FOR THE POWER FEED OF LIT-1013. THE POWER PLUG FOR LIT-1013 SHALL BE CONNECTED TO THE EXISTING SPARE RECEPTACLE AT THE UPS OF FLUORIDE CONTROL PANEL.

CIRCUIT SCHEDULE CONTROL, INSTRUMENTATION

CKT I.D.	CONDUIT AND CONDUCTOR SIZE
[A1]	[3/4 "C, 2#14, 1#14G]
[B1]	[3/4 "C, 3#14, 1#14G]
[C1]	[3/4 "C, 4#14, 1#14G]
[D1]	[3/4 "C, 5#14, 1#14G]
[E1]	[3/4 "C, 6#14, 1#14G]
[F1]	[3/4 "C, 7#14, 1#14G]
[G1]	[3/4 "C, 9#14, 1#14G]
[H1]	[1"C, 11#14, 1#14G]
[J1]	[1 1/4"C, 20#14, 1#14G]
[K1]	[1"C, 7/C TYPE A]
[L1]	[1 1/4"C, 12/C TYPE A]
[M1]	[1 1/2 "C, 19/C TYPE A]
[N1]	[1 1/2"C, 30#14, 1#14G]
[P1]	[2"C, 40#14, 1#14G]
[Q1]	[3/4 "C, 1-#16, TW PR]
[R1]	[3/4 "C, 1-TYPE B, TW SHLD PR]
[S1]	[3/4 "C, 2-TYPE B, TW SHLD PR]
[T1]	[1"C, 3-TYPE B, TW SHLD PR]
[U1]	[1 1/4 "C, 4-TYPE B, TW SHLD PR]
[V1]	[2 "C, 11-TYPE B, TW SHLD PR]
[W1]	[1"C, 1-BELDEN 3085A DEVICENET]
[X1]	[2 1/2 "C, 100#14, 1#12G]
[Y1]	[3/4"C, 1-CAT 6e CABLE]
[Z1]	[1"C, 1-RTD TYPE CABLE]

[A] = [4"C, 3#6(5KV), 1#8G]
[U3] = [3 1/2"C, 3-500KCM, 1#1/0G]
[P3] = [2 1/2"C, 3-250KCM, 1#4G]
[A3] = [3/4"C, 3#12, 1#12G]
[AA] – [3"C, 1-FIBER OPTIC CABLE SUPPLIED BY I&C]
[BB] – [4"C, 2-FIBER OPTIC CABLE SUPPLIED BY I&C]
[CC] – [1"C EMPTY W/ PULL STRING]
[DD] – [4"C EMPTY W/ PULL STRING]
[EE] – [3"C EMPTY W/ PULL STRING]
[FF] – [2"C EMPTY W/ PULL STRING]
[TT] – [1"C, 2-WIRE BELDEN 8471 CABLE]
[B2] – [3/4"C, 2#12, 1#12G]
[Y2] – [1"C, 2-CAT 6e CABLE]
1-FIBER OPTIC CABLE = 6-PAIRS F.O. (SPECIFICATION 13300)

LUMINAIRE SCHEDULE

TYPE	VOLTS	DESCRIPTION	MANUFACTURER	CATALOG NO	LAMPS	MOUNTING	REMARKS
1	120	ENCLOSED AND GASKETED FIBERGLASS EXTREME ENVIRONMENT LED	COLUMBIA LIGHTING	LXEM-4-VW-35-RA-E-U-SSL	LED (24.4W) 3,143 LUMENS	SUSPENDED	9' MOUNTING HEIGHT. USE UNISTRUT FOR MOUNTING.
2	120	EXIT LIGHT WITH NICAD BATTERY	DUALLITE	CLS-S-E-3	LED LAMPS	SURFACE	8' MOUNTING HEIGHT, SINGLE & DOUBLE SEE PLANS. SIDE MOUNT KIT AS NEEDED.
3	120	EMERGENCY LIGHT WITH NICAD BATTERY	DUALLITE	DYNRD-4X	2-3W LED	SURFACE	TYPICAL MOUNT 8'.
4	120	EXTERIOR LIGHT WITH PHOTOCELL	HUBBELL OUTDOOR	LNC-9L-3K-4-PC(120)	LED 22W 1680 LUMENS	WALL	

LIGHTING PANELBOARD SCHEDULE 'LP-11'

BUS AMPS A	BUS AMPS B	BUS AMPS C	LOAD	POLES	AMPS	BUS A B C	AMPS	POLES	LOAD	BUS AMPS A	BUS AMPS B	BUS AMPS C
2.0			LIGHTING – INTERIOR	1	20	1 – 2	20	1	LIGHTING – EXTERIOR	1.0		
	3.0		INTERIOR RECEPTACLE	1	20	3 – 4	20	1	EXTERIOR RECEPTACLE		1.5	
		3.0	WELL PLC PANEL	1	20	5 – 6	20	1	SPARE			–
–			SPARE	1	20	7 – 8	20	1	SPARE	–		
	–		SPARE	1	20	9 – 10	20	1	SPARE		–	
		–	SPARE	1	20	11 – 12	20	1	SPARE			–

TOTAL AMPS: BUS A 3.0 BUS B 4.5 BUS C 3.0 CONNECTED Kva 1.3

RATED VOLTAGE: ■ 120/208 ☐ 480/277 3 PHASE, 4 WIRE | BRANCH POLES ■ 12 ☐ 20 ☐ 30 ☐ 42
RATED AMPS: ■ 100 ☐ 225 ☐ 400 ☐ _____ | CABINET: ■ SURFACE ☐ FLUSH
NEUTRAL BUS ■ 100% ☐ 150% ☐ 200% | ■ GROUND BUS | ■ HINGED DOOR | ■ KEYED DOOR LATCH | LOCATION: WELL HOUSE
■ CIRCUIT BREAKER (BOLT-IN) BRANCH DEVICES | ☐ EXTERNAL TVSS | ENCLOSURE TYPE ■ NEMA 1 ☐ NEMA 3R ☐ NEMA 4X ☐ _____
☐ MAIN LUGS ONLY | MAIN 25 AMPS ■ BREAKER | ☐ _____ TO BE GFI BREAKERS
PANELBOARD MUST BE RATED TO INTERRUPT A SHORT CIRCUIT ISC OF ____18,000 AMPS SYMMETRICAL.
APPROVED MF'RS. SEE SPECIFICATION. | COPPER BUSSES | MAIN LUGS _____ SETS SIZE: _____

TETRA TECH
www.tetratech.com
201 EAST PINE STREET, SUITE 1000
ORLANDO, FL 32801
PHONE: 407-839-3955 FAX: 407-839-3790

HILLERS ELECTRICAL ENGINEERING, INC.
23257 STATE ROAD 7, SUITE 100
BOCA RATON, FLORIDA 33428
(561) 451-9165
(561) 451-9166 FAX
LICENSE NO: EB 0006977

BID SET

MARK	DATE	DESCRIPTION	BY

Client: ORANGE COUNTY UTILITIES
Proj. Loc.: ORANGE COUNTY, FL

WESTERN REGIONAL WATER SUPPLY FACILITY
IMPROVEMENTS PHASE 3B

RISER DIAGRAMS AND SCHEDULES

Project No.:	200-10034-12003
Designed By:	TW
Drawn By:	TN
Checked By:	PFH

E008

Copyright: Tetra Tech

Thursday, August 23, 2018 5:56:39 PM DRAWING: E:\PROJECTS\TTT\TT01D Western\PHASE-3B\DWG\SheetFiles\ELEC\TT01D3B-E008.DWG LAYOUT: E008 USER NAME: WIN, THEIN

YARD CONDUIT SCHEDULE

NO.	FROM	TO	REMARKS
YC01	PSC-201 (HSP BUILDING – ELEC. ROOM)	XFMR PMT-411 @ WELL#11 VIA EXST. MH	SEE DRAWING E004
YC02	PATCH PANEL (HYPO. BUILDING – ELEC. RM)	NEW WELL NO.11 PLC PANEL	SEE DRAWING E007
YC03	PATCH PANEL (HYPO. BUILDING – ELEC. RM)	NEW WELL NO.11 PLC PANEL	SEE DRAWING E007
YC04	EXST. HSP PLC PANEL (HSP BLDG – CONTROL)	NEW GST#3 ACCESS ALARM	SEE DRAWING E008
YC05	EXST. HSP PLC PANEL (HSP BLDG – CONTROL)	NEW LIT-10103 @ GST#3	SEE DRAWING E008
YC06	EXST. PANEL F (FLUORIDE BUILDING)	NEW LIT-10103 @ GST#3	SEE DRAWING E008
YC07	EXST. HSP PLC PANEL (HSP BLDG – CONTROL)	STUB-UP AND CAP NEAR LIT OF GST#3	SEE DRAWING E008
YC08	EXISTING MANHOLE MH#2 (DWG E102)	STUB-UP AND CAP NEAR XFMR PMT-11	SEE DRAWING E004
YC09	STUB-UP AND CAP NEAR XFMR PMT-11	J-BOX ON EXTERIOR WALL OF HYPO. ELEC. RM	SEE DRAWING E007
YC10	STUB-UP AND CAP NEAR XFMR PMT-11	J-BOX ON EXTERIOR WALL OF HYPO. ELEC. RM	SEE DRAWING E007
YC11	–	–	–
YC12	–	–	–
YC13	–	–	–
YC14	–	–	–
YC15	–	–	–
YC16	–	–	–
YC17	–	–	–
YC18	–	–	–
YC19	–	–	–
YC20	–	–	–
YC21	–	–	–
YC22	–	–	–
YC23	–	–	–
YC24	–	–	–
YC25	–	–	–
YC26	–	–	–
YC27	–	–	–
YC28	–	–	–
YC29	–	–	–
YC30	–	–	–
YC31	–	–	–
YC32	–	–	–
YC33	–	–	–
YC34	–	–	–
YC35	–	–	–
YC36	–	–	–
YC37	–	–	–
YC38	–	–	–
YC39	–	–	–
YC40	–	–	–
YC41	–	–	–

NOTE:

1. YARD CONDUIT SHALL BE MINIMUM 1" IF CIRCUIT ID SHOWS SMALLER THAN 1" CONDUIT.

TETRA TECH
www.tetratech.com
201 EAST PINE STREET, SUITE 1000
ORLANDO, FL 32801
PHONE: 407-839-3955 FAX: 407-839-3790

HILLERS ELECTRICAL ENGINEERING, INC.
23257 STATE ROAD 7, SUITE 100
BOCA RATON, FLORIDA 33428
(561) 451-9165
(561) 451-9185 FAX
LICENSE NO: EB 0006977

BID SET

MARK	DATE	DESCRIPTION	BY

Client: ORANGE COUNTY UTILITIES
Proj. Loc.: ORANGE COUNTY, FL

WESTERN REGIONAL WATER SUPPLY FACILITY
IMPROVEMENTS PHASE 3B

YARD CONDUITS SCHEDULE

Project No.:	200-10034-12003
Designed By:	TW
Drawn By:	TN
Checked By:	PFH

E009

Copyright: Tetra Tech

Thursday, August 23, 2018 5:56:45 PM DRAWING: E:\PROJECTS\TTTT01D Western\PHASE-3B\DWG\SheetFiles\ELEC\TT01D3B-E009.DWG LAYOUT: E009 USER NAME: WIN, THEIN

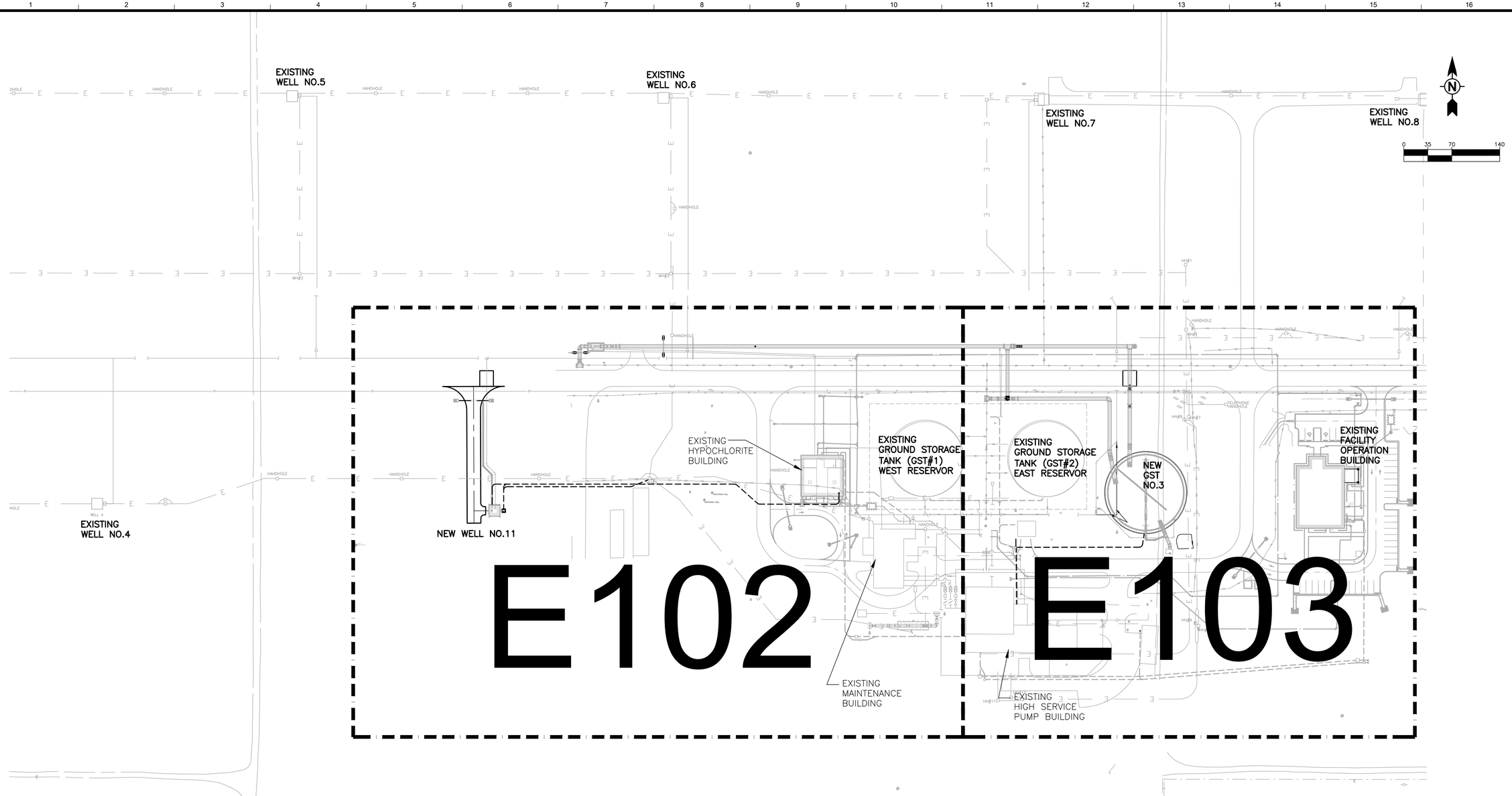

ELECTRICAL NOTES:

1. CONTRACTOR SHALL PROVIDE AND INSTALL PIPE STAND WITH SUN SHIELD (AS PER DETAILS ON DRAWING I501) FOR ALL FIELD INSTRUMENTS, INDICATED OR NOT.
2. YARD CONDUIT ROUTING AND FIELD EQUIPMENT LOCATIONS ARE SHOWN FOR ILLUSTRATION PURPOSES ONLY. CONTRACTOR SHALL COORDINATE WITH OTHER DISCIPLINES AND EXISTING SITE CONDITION TO AVOID CONFLICTS.
3. CONTRACTOR SHALL KEEP THE SEPARATION BETWEEN POWER AND INSTRUMENTATION YARD CONDUITS AS PER DRAWING E002, NOTE 23.
4. MEDIUM VOLTAGE CABLE/DUCTBANK ROUTING SHALL MAINTAIN 2 FEET (MINIMUM) SEPARATION FROM 480V CABLE/DUCTBANK TO THE GREATEST EXTENT POSSIBLE.
5. CONTRACTOR SHALL PROVIDE AND INSTALL NEW LIGHTNING PROTECTION SYSTEM AS PER SPECIFICATION 16670 COMPLETE IN PLACE.

AS-BUILT NOTE

1. THE EXISTING ELECTRICAL INFORMATION IS OBTAINED FROM "RECORD DRAWINGS" AND OTHER "AS-BUILT DRAWINGS". CONTRACTOR SHALL VERIFY THE INFORMATION PROVIDED IN THESE DRAWINGS AND ADJUST ACCORDINGLY. ANY CONFLICTS SHALL BE BROUGHT TO THE ENGINEER'S ATTENTION BEFORE SUBMITTING HIS BID.

TETRA TECH
www.tetratech.com
201 EAST PINE STREET, SUITE 1000
ORLANDO, FL 32801
PHONE: 407-839-3955 FAX: 407-839-3790

HILLERS ELECTRICAL ENGINEERING, INC.
23257 STATE ROAD 7, SUITE 100
BOCA RATON, FLORIDA 33428
(561) 451-9165
(561) 451-9185 FAX
LICENSE NO: EB 0006977

BID SET

MARK	DATE	DESCRIPTION	BY

Client: ORANGE COUNTY UTILITIES
Proj. Loc.: ORANGE COUNTY, FL

WESTERN REGIONAL WATER SUPPLY FACILITY
IMPROVEMENTS PHASE 3B

ELECTRICAL SITE PLAN - KEY PLAN

Project No.:	200-10034-12003
Designed By:	TW
Drawn By:	TN
Checked By:	PFH

E101

Copyright: Tetra Tech

Thursday, August 23, 2018 5:56:56 PM DRAWING: E:\PROJECTS\TTT01D Western\PHASE-3B\DWG\SheetFiles\ELEC\TT01D3B-E101.DWG LAYOUT: LAYOUT USER NAME: WIN, THEIN

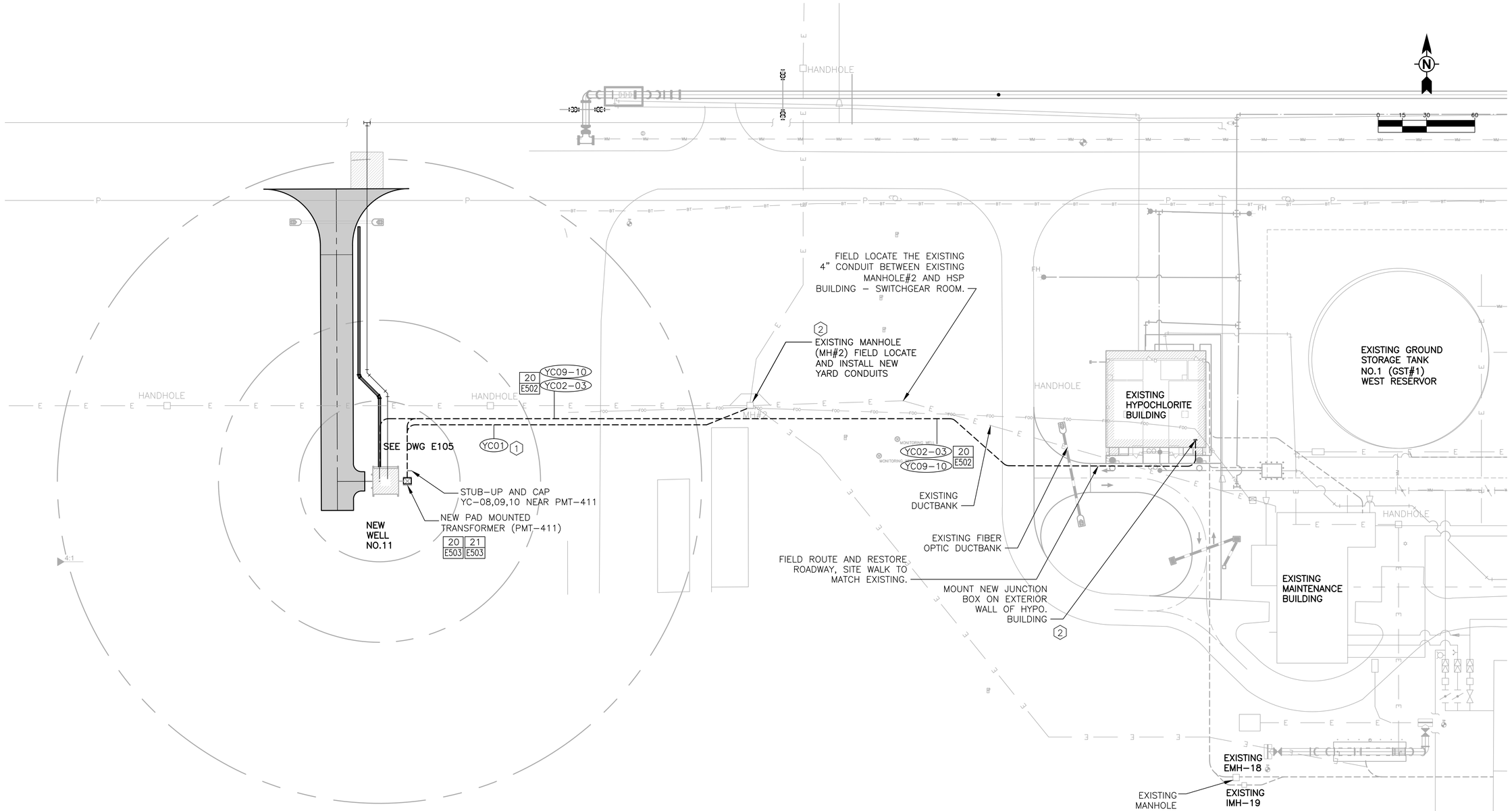

KEYED NOTES:

1. YC01 USES EXISTING CONDUIT FROM PSC–201 LOCATED AT HSP BUILDING TO THE EXISTING MANHOLE LOCATED NEAR AERATOR AND CLEARWELL (TO BE DEMOLISHED). NEW CONDUIT SHALL BE INSTALLED FROM EXISTING MANHOLE TO THE NEW WELL NO.11. SEE ONE LINE DIAGRAM ON DRAWING E004 FOR ADDITIONAL INFORMATION.

2. CONTRACTOR SHALL PROVIDE AND INSTALL NEW NEMA 4X 316 STAINLESS STEEL JUNCTION BOX ON THE EXTERIOR WALL OF HYPOCHLORITE BUILDING. JUNCTION BOX SHALL HAVE NEMA 4X VENT DRAIN KIT (HOFFMAN H20MIT OR EQUAL) AND BE MOUNTED ON EXTERIOR WALL OF HYPOCHLORITE BUILDING – ELECTRICAL ROOM. NO EXPOSED CONDUIT SHALL DIRECTLY CONTINUED TO THE EXISTING HYPO. PLC CONTROL PANEL (FIBER OPTIC PATCH PANEL) DUE TO CONDENSATION CAN CAUSE WATER DRIPPING INTO EXISTING PLC CONTROL PANEL. CONDUIT PENETRATION AT EXISTING HYPO. PLC CONTROL PANEL SHALL AVOID THE LOCATION DIRECTLY ABOVE THE PLC COMPONENTS. MINIMUM DIMENSIONS OF JUNCTION BOX SHALL BE 20"Wx20"Hx8"D. CONTRACTOR SHALL ADJUST THE DIMENSION OF JUNCTION BOX BASED ON THE ACTUAL CONDUITS ENTRY AND EXIT LOCATIONS AS WELL AS QUANTITY OF CONDUITS AS PER NEC REQUIREMENTS. RESTORE ROADWAY TO MATCH EXISTING.

TETRA TECH
www.tetratech.com
201 EAST PINE STREET, SUITE 1000
ORLANDO, FL 32801
PHONE: 407-839-3955 FAX: 407-839-3790

HILLERS ELECTRICAL ENGINEERING, INC.
23257 STATE ROAD 7, SUITE 100
BOCA RATON, FLORIDA 33428
(561) 451-9165
(561) 451-9585 FAX
LICENSE NO: EB 0006977

BID SET

MARK	DATE	DESCRIPTION	BY

Client: ORANGE COUNTY UTILITIES
Proj. Loc.: ORANGE COUNTY, FL

WESTERN REGIONAL WATER SUPPLY FACILITY
IMPROVEMENTS PHASE 3B

ELECTRICAL SITE PLAN - SHEET 1

Project No.:	200-10034-12003
Designed By:	TW
Drawn By:	TN
Checked By:	PFH

E102

Copyright: Tetra Tech

Thursday, August 23, 2018 5:57:03 PM DRAWING: E:\PROJECTS\TTI\TT01D Western\PHASE-3B\DWG\SheetFiles\ELEC\TT01D3B-E102.DWG LAYOUT: LAYOUT USER NAME: WIN, THEIN

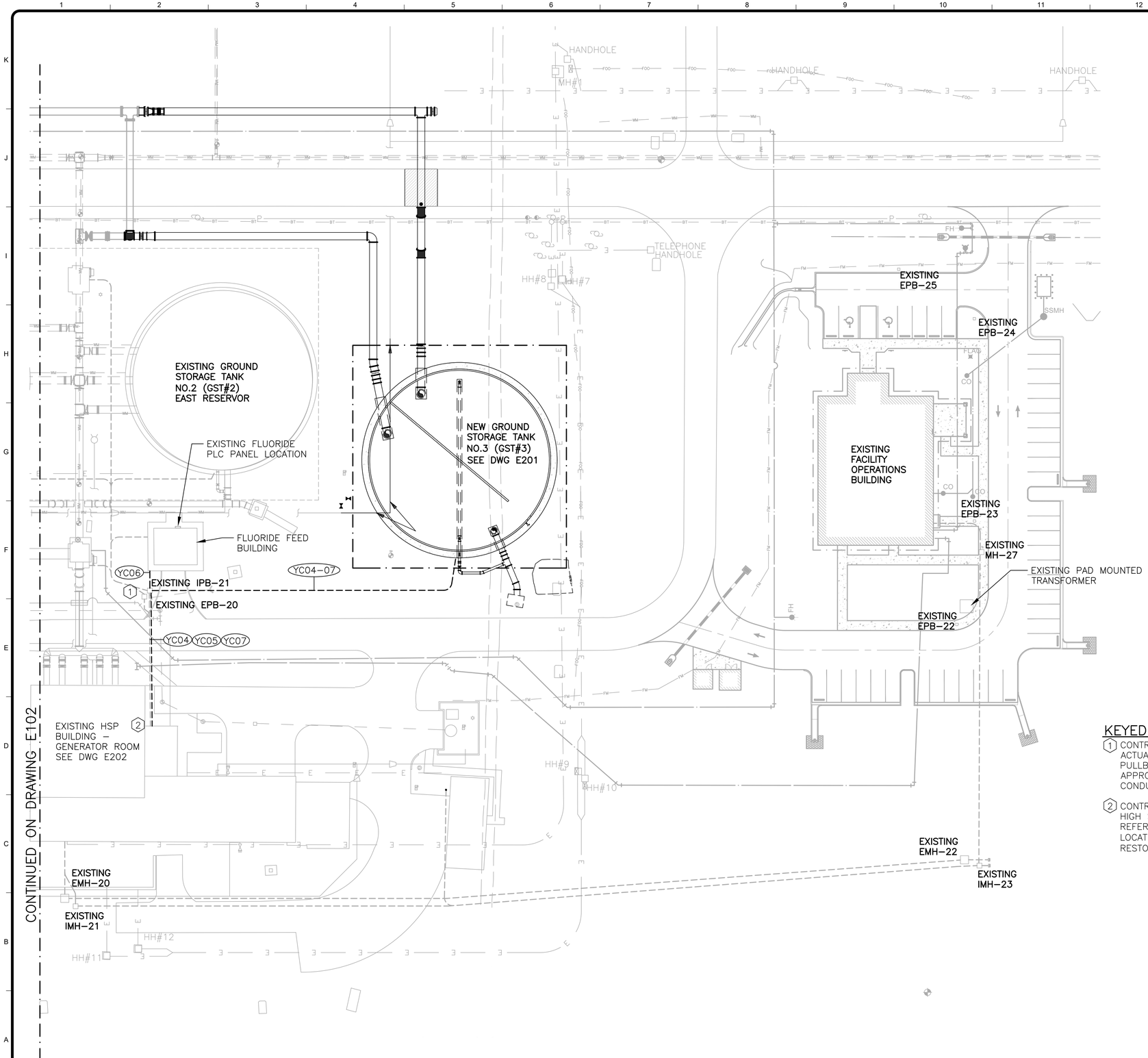

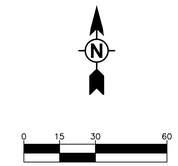

KEYED NOTES:

1. CONTRACTOR SHALL FIELD LOCATE EXISTING EPB-20 AND IPB-21 ACTUAL LOCATION AND ROUTE NEW CONDUITS TO ASSOCIATED EXISTING PULLBOX. EXISTING EPB-20 AND IPB-21 LOCATIONS ARE SHOWN APPROXIMATE ONLY AND NOT BEEN FIELD SURVEYED. FIELD ADJUST CONDUIT ROUTING AS NEEDED.

2. CONTRACTOR SHALL FIELD ROUTE EXPOSED CONDUITS IN EXISTING HIGH SERVICE PUMP BUILDING TO EXISTING HSP PLC CONTROL PANEL. REFER TO DRAWING E202 FOR EXISTING HSP PLC CONTROL PANEL LOCATION. SAW CUT EXISTING WALKWAY/SIDWALK IF NEEDED AND RESTORE TO MATCH EXISTING AFTER CONDUIT INSTALLATION.

TETRA TECH
www.tetratech.com
201 EAST PINE STREET, SUITE 1000
ORLANDO, FL 32801
PHONE: 407-839-3955 FAX: 407-839-3790

HILLERS ELECTRICAL ENGINEERING, INC.
23257 STATE ROAD 7, SUITE 100
BOCA RATON, FLORIDA 33428
(561) 451-9165
(561) 451-9166 FAX
LICENSE NO: EB 0006977

BID SET

MARK	DATE	DESCRIPTION	BY

Client: ORANGE COUNTY UTILITIES
Proj. Loc.: ORANGE COUNTY, FL

WESTERN REGIONAL WATER SUPPLY FACILITY
IMPROVEMENTS PHASE 3B

ELECTRICAL SITE PLAN - SHEET 2

Project No.:	200-10034-12003
Designed By:	TW
Drawn By:	TN
Checked By:	PFH

E103

Copyright: Tetra Tech

Thursday, August 23, 2018 5:57:13 PM DRAWING: E:\PROJECTS\TT\T01D Western\PHASE-3B\DWG\SheetFiles\ELEC\TT01D3B-E103.DWG LAYOUT: LAYOUT USER NAME: WIN, THEIN

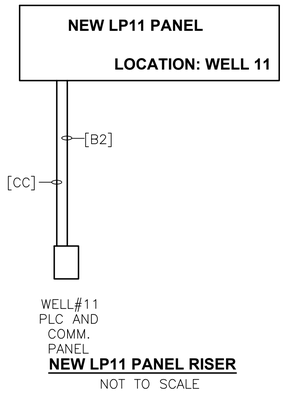

NEW LP11 PANEL RISER

NOT TO SCALE

NOTE: SEE DWG E008 FOR CIRCUIT SCHEDULE.

KEYED NOTES:

1. REFER TO ELECTRICAL SITE PLAN (DRAWING E102) FOR WELL HOUSE ORIENTATION AND TRANSFORMER PAD ARRANGEMENT. ADJUST ELECTRICAL EQUIPMENT LAYOUT AS REQUIRED PER WELL HOUSE ORIENTATION TO AVOID CONFLICTS.
2. CONTRACTOR SHALL PROVIDE AND INSTALL DOOR CONTACT (INTRUSION SWITCH) AND ROOF ACCESS HATCH SWITCH (INTRUSION SWITCH) FOR NEW WELL HOUSE NO. 11. SEE SPECIFICATION 16050 FOR INTRUSION SWITCH REQUIREMENTS. FIELD VERIFY THE MOUNTING DETAIL AND INSTALL ACCORDINGLY. PROVIDE AND INSTALL NEW CONDUIT AND CABLE AS SHOWN ON RISER DIAGRAMS.
3. CONTRACTOR SHALL PROVIDE AND INSTALL ROLL-UP DOOR CONTACT (INTRUSION SWITCH) FOR NEW WELL HOUSE NO.11. NEW ROLL-UP DOOR CONTACT SHALL BE EDWARDS SIGNALING MAGNETIC NON-CONTACT SAFETY SWITCH MODEL 2204 SERIES OR OWNER APPROVED EQUAL.

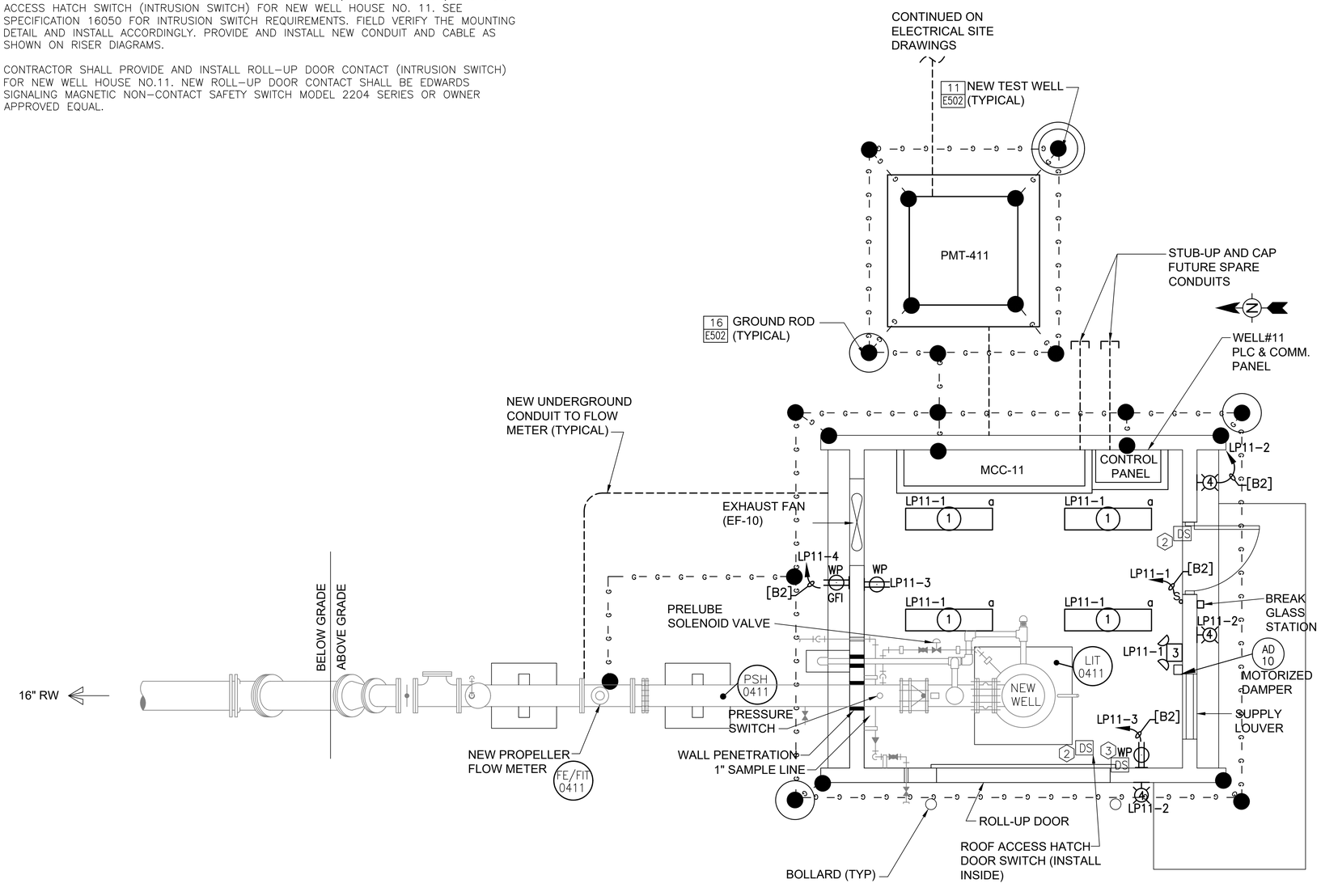

TYPICAL WELL HOUSE ELECTRICAL PLAN

SCALE: 3/8"=1'-0"

0 2' 4' 6'

TETRA TECH
www.tetratech.com
201 EAST PINE STREET, SUITE 1000
ORLANDO, FL 32801
PHONE: 407-839-3955 FAX: 407-839-3790

HILLERS ELECTRICAL ENGINEERING, INC.
23257 STATE ROAD 7, SUITE 100
BOCA RATON, FLORIDA 33428
(561) 451-9165
(561) 451-9185 FAX
LICENSE NO: EB 0006977

BID SET

MARK	DATE	DESCRIPTION	BY

Client: ORANGE COUNTY UTILITIES
Proj. Loc.: ORANGE COUNTY, FL

WESTERN REGIONAL WATER SUPPLY FACILITY
IMPROVEMENTS PHASE 3B

WELL HOUSE NO. 11
- ELECTRICAL PLAN

Project No.:	200-10034-12003
Designed By:	TW
Drawn By:	TN
Checked By:	PFH

E104

Copyright: Tetra Tech

Thursday, August 23, 2018 5:57:15 PM DRAWING: E:\PROJECTS\TTNTT01D Western\PHASE-3B\DWG\SheetFiles\ELEC\TT01D3B-E104.DWG LAYOUT: Z USER NAME: WIN, THEIN

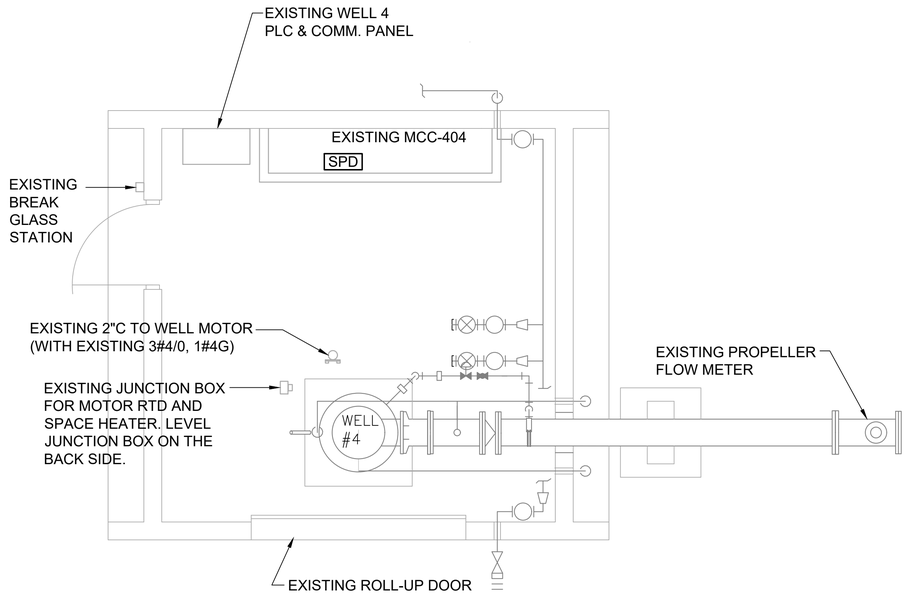

WELL NO.4 HOUSE ELECTRICAL PLAN

SCALE: 3/8"=1'-0"

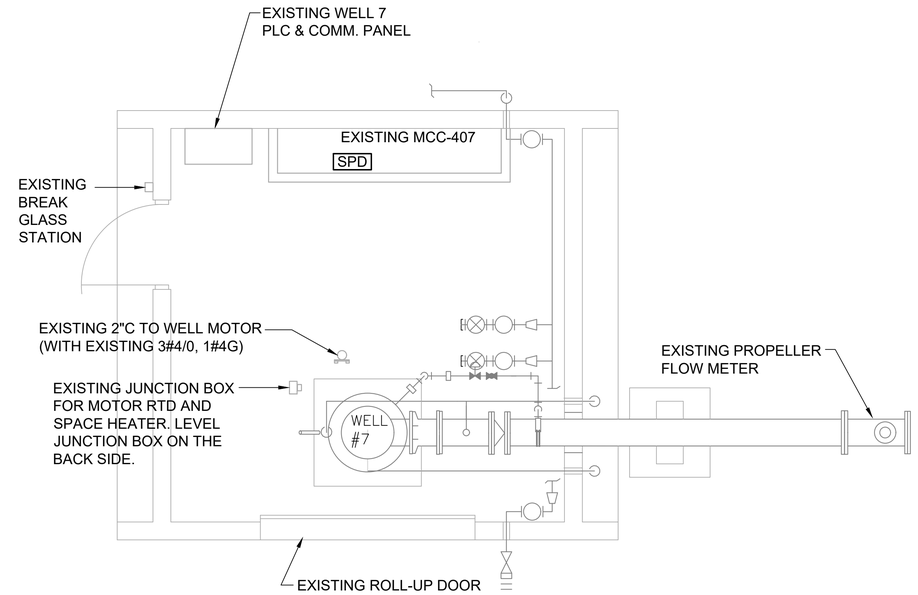

WELL NO.7 HOUSE ELECTRICAL PLAN

SCALE: 3/8"=1'-0"

EXISTING MCC-40Y (Y=4, 7)

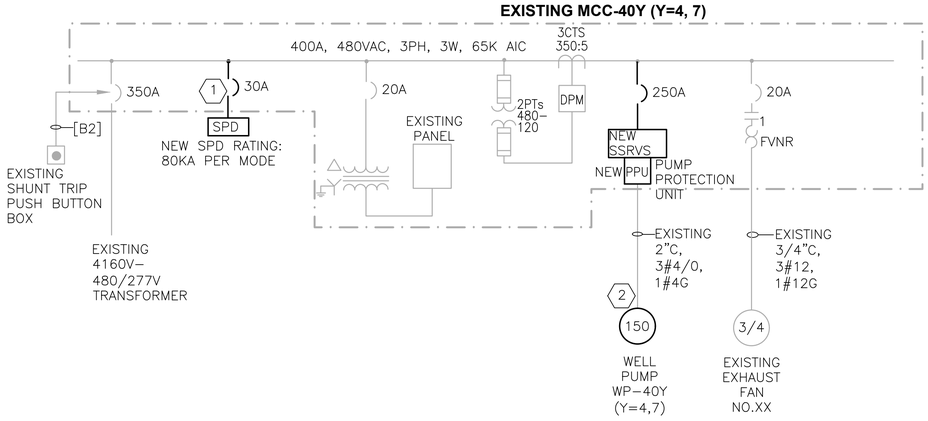

EXISTING WELL-40Y ONE LINE DIAGRAM

NOT TO SCALE
Y = 4, 7

KEYED NOTES:

1. CONTRACTOR SHALL PROVIDE AND INSTALL NEW BREAKER AND SPD FOR EXISTING WELL MCC NO.4 AND NO.7. PROVIDE AND INSTALL CONDUIT/CABLE BETWEEN BREAKER AND SPD. SPD SHALL BE MOUNTED ON TOP OF THE MCC. DO NOT MOUNT SPD IN THE MCC SECTION.

2. CONTRACTOR SHALL REPLACE SSRVS STARTER AND PUMP PROTECTION UNIT (PPU) FOR WELL NO.4 AND NO.7. TURN OVER THE REMOVED SSRVS AND PPU TO THE OWNER. DISCONNECT AND REMOVE EXISTING WIRES BETWEEN MCC AND WELL PUMP/MOTOR. PROVIDE AND INSTALL NEW CABLES IN THE EXISTING CONDUIT FOR WELL PUMP. COORDINATE WITH PUMP/MOTOR SUPPLIER FOR THE MOTOR PROTECTION REQUIREMENTS AND PROVIDE ADDITIONAL WIRES/CONDUITS AS NEEDED.

TETRA TECH
www.tetratech.com
201 EAST PINE STREET, SUITE 1000
ORLANDO, FL 32801
PHONE: 407-839-3955 FAX: 407-839-3790

HILLERS ELECTRICAL ENGINEERING, INC.
23257 STATE ROAD 7, SUITE 100
BOCA RATON, FLORIDA 33428
(561) 451-9165
(561) 451-9185 FAX
LICENSE NO: EB 0006977

BID SET

MARK	DATE	DESCRIPTION	BY

Client: ORANGE COUNTY UTILITIES
Proj. Loc.: ORANGE COUNTY, FL

WESTERN REGIONAL WATER SUPPLY FACILITY
IMPROVEMENTS PHASE 3B

EXISTING WELL 4 AND 7
ELECTRICAL PLAN

Project No.:	200-10034-12003
Designed By:	TW
Drawn By:	TN
Checked By:	PFH

E105

Copyright: Tetra Tech

Thursday, August 23, 2018 5:57:20 PM DRAWING: E:\PROJECTS\TTT\T01D Western\PHASE-3B\DWG\SheetFiles\ELEC\TT01D3B-E105.DWG LAYOUT: E-105 USER NAME: WIN, THEIN

EXISTING WELL NO.4 MCC

NOT TO SCALE

EXISTING WELL NO.7 MCC

NOT TO SCALE

KEYED NOTES:

1. CONTRACTOR SHALL PROVIDE AND INSTALL NEW BREAKER AND SPD FOR EXISTING WELL MCC NO.4 AND NO.7. PROVIDE AND INSTALL CONDUIT/CABLE BETWEEN BREAKER AND SPD. SPD SHALL BE MOUNTED ON TOP OF THE MCC. DO NOT MOUNT SPD IN THE MCC SECTION.

2. CONTRACTOR SHALL REPLACE SSRVS STARTER, BREAKER, AND PUMP PROTECTION UNIT (PPU) FOR WELL NO.4 AND NO.7. TURN OVER THE REMOVED SSRVS AND PPU TO THE OWNER. DISCONNECT AND REMOVE EXISTING WIRES BETWEEN MCC AND WELL PUMP/MOTOR. PROVIDE AND INSTALL NEW CABLES IN THE EXISTING CONDUIT FOR WELL PUMP. COORDINATE WITH PUMP/MOTOR SUPPLIER FOR THE MOTOR PROTECTION REQUIREMENTS AND PROVIDE ADDITIONAL WIRES/CONDUITS AS NEEDED. CONTROL SCHEMATIC FOR THE NEW SSRVS SHALL BE SIMILAR TO THE EXISTING SSRVS CONTROL SCHEMATIC AND ADJUST AS NEEDED. MATCH EXISTING MANUFACTURER AND REPLACE MCC DOORS AS NEEDED.

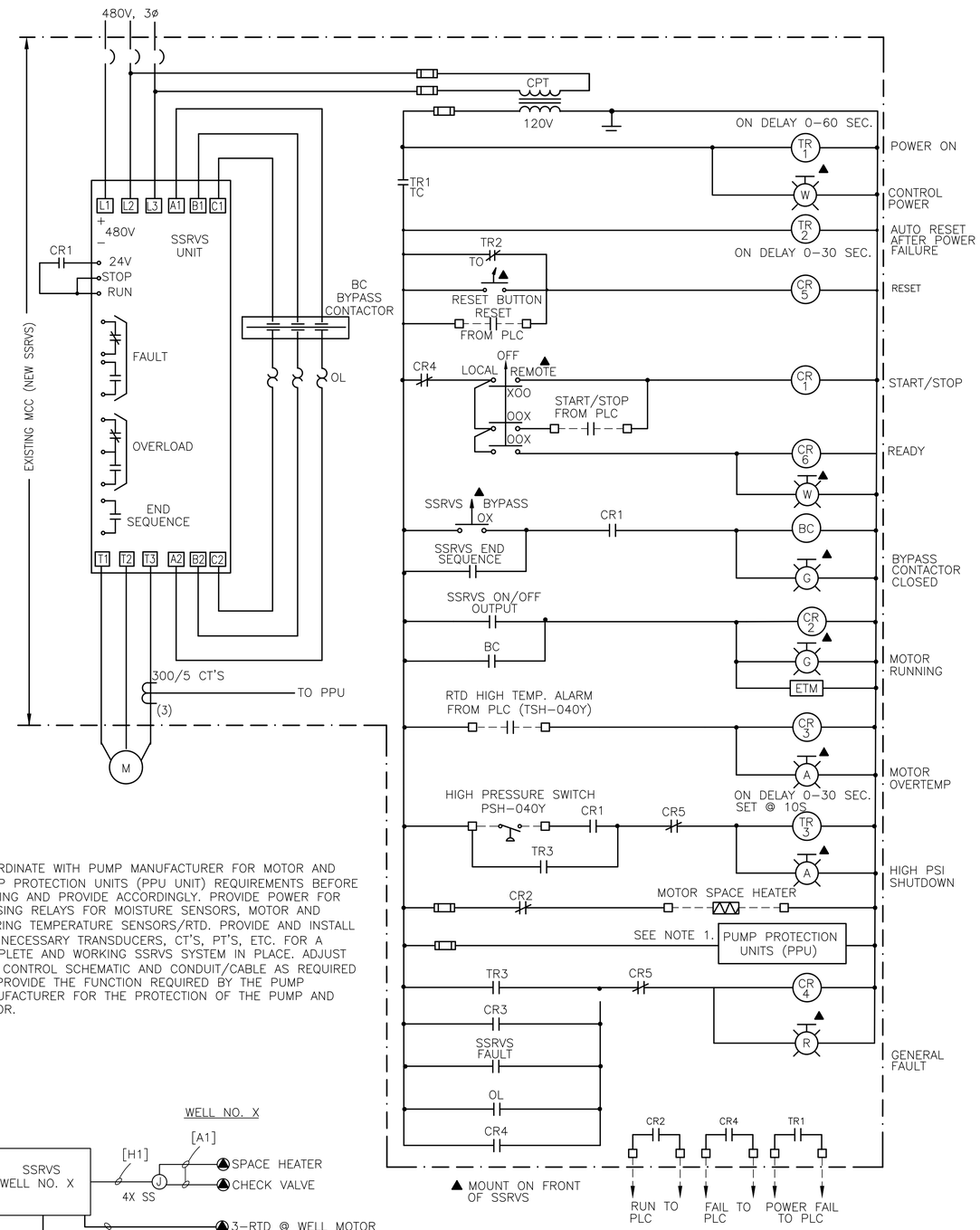

SSRVS SCHEMATIC FOR WELL NO. X

NOT TO SCALE

X = 4, 7

NOTE

1. COORDINATE WITH PUMP MANUFACTURER FOR MOTOR AND PUMP PROTECTION UNITS (PPU UNIT) REQUIREMENTS BEFORE BIDDING AND PROVIDE ACCORDINGLY. PROVIDE POWER FOR SENSING RELAYS FOR MOISTURE SENSORS, MOTOR AND BEARING TEMPERATURE SENSORS/RTD. PROVIDE AND INSTALL ALL NECESSARY TRANSDUCERS, CT'S, PT'S, ETC. FOR A COMPLETE AND WORKING SSRVS SYSTEM IN PLACE. ADJUST THE CONTROL SCHEMATIC AND CONDUIT/CABLE AS REQUIRED TO PROVIDE THE FUNCTION REQUIRED BY THE PUMP MANUFACTURER FOR THE PROTECTION OF THE PUMP AND MOTOR.

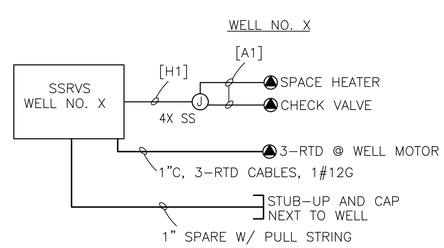

WELL NO. X RISER

NOT TO SCALE

X = 9, 10, 11

TETRA TECH
www.tetratech.com
201 EAST PINE STREET, SUITE 1000
ORLANDO, FL 32801
PHONE: 407-839-3955 FAX: 407-839-3790

HILLERS ELECTRICAL ENGINEERING, INC.
23257 STATE ROAD 7, SUITE 100
BOCA RATON, FLORIDA 33428
(561) 451-9165
(561) 451-9085 FAX
LICENSE NO: EB 0006977

BID SET

MARK	DATE	DESCRIPTION	BY

Client: ORANGE COUNTY UTILITIES
Proj. Loc.: ORANGE COUNTY, FL

WESTERN REGIONAL WATER SUPPLY FACILITY
IMPROVEMENTS PHASE 3B

EXISTING WELL 4 AND 7
PHOTOS AND STARTER SCHEMATIC

Project No.:	200-10034-12003
Designed By:	TW
Drawn By:	TN
Checked By:	PFH

E106

Copyright: Tetra Tech

Thursday, August 23, 2018 5:57:24 PM DRAWING: E:\PROJECTS\TTNT01D Western\PHASE-3B\DWG\SheetFiles\ELEC\TT01D3B-E106.DWG LAYOUT: E-106 USER NAME: WIN, THEIN

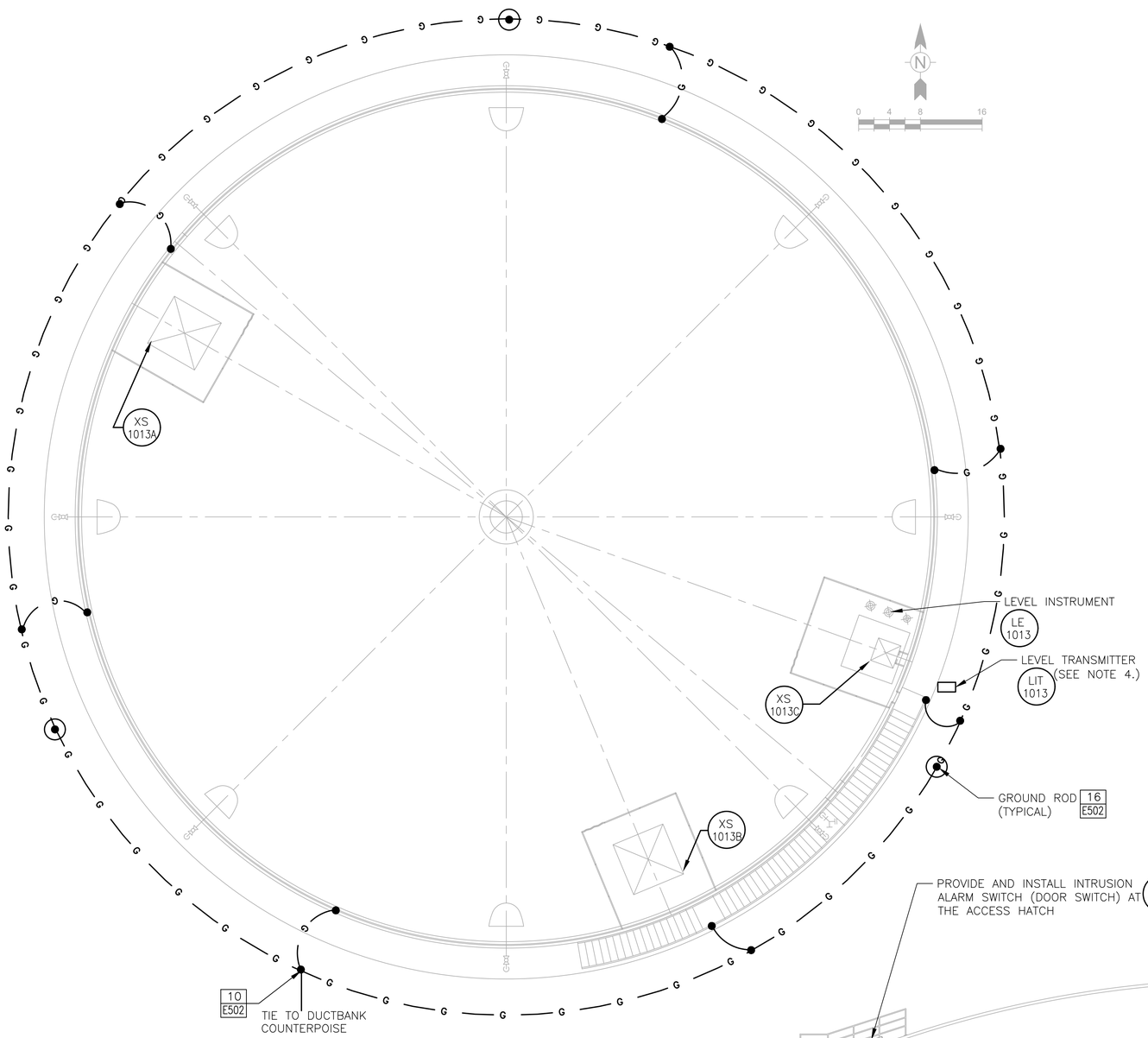

UPPER PLAN

SCALE: 1/8"=1'-0"

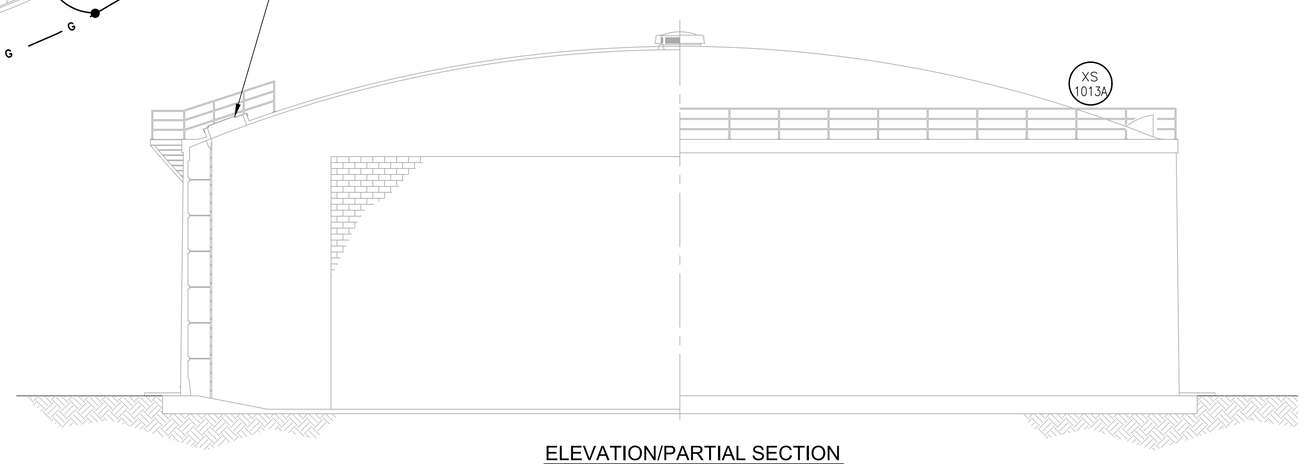

ELEVATION/PARTIAL SECTION

SCALE: 1/8"=1'-0"

NOTES:

1. CONTRACTOR SHALL PROVIDE AND INSTALL LIMIT SWITCH (INTRUSION SWITCH) AT EACH OF THE ACCESS HATCHES FOR NEW GROUND STORAGE TANK. FIELD VERIFY MOUNTING OF THE LIMIT SWITCHES AND INSTALL ACCORDINGLY.
2. CONTRACTOR SHALL PROVIDE AND INSTALL LIMIT SWITCH (INTRUSION SWITCH) AT EACH OF THE ACCESS HATCHES FOR BOTH EXISTING GROUND STORAGE TANKS (DRAWINGS E102 & E103). FIELD VERIFY MOUNTING OF THE LIMIT SWITCHES AND INSTALL ACCORDINGLY.
3. PROVIDE AND INSTALL NEW LIGHTNING PROTECTION SYSTEM AS PER SPECIFICATION 16670 FOR NEW GROUND STORAGE TANK AND TIE TO THE GROUND GRID. PROVIDE ADDITIONAL GROUND RODS IF REQUIRED BY LIGHTNING PROTECTION SYSTEM INSTALLER.
4. PROVIDE AND INSTALL NEW CONCRETE PAD FOR LEVEL TRANSMITTER PIPE STAND MOUNTING (SEE DETAIL ON DRAWING I501). COORDINATE WITH OWNER AND FIELD ADJUST LEVEL TRANSMITTER LOCATION AS NEEDED.
5. CONDUITS AT NEW GROUND STORAGE TANK ARE NOT SHOWN FOR CLARITY. CONTRACTOR SHALL FIELD ROUTE EXPOSED CONDUITS ON NEW GROUND STORAGE TANK AND ADJUST AS NEEDED TO AVOID CONFLICTS WITH OTHER TRADES AS WELL AS AVOID INSTALLING CONDUITS AS A TRIPPING HAZARD.

TETRA TECH
www.tetratech.com
201 EAST PINE STREET, SUITE 1000
ORLANDO, FL 32801
PHONE: 407-839-3955 FAX: 407-839-3790

HILLERS ELECTRICAL ENGINEERING, INC.
23257 STATE ROAD 7, SUITE 100
BOCA RATON, FLORIDA 33428
(561) 451-9165
(561) 451-9385 FAX
LICENSE NO: EB 0006977

BID SET

MARK	DATE	DESCRIPTION	BY

Client: ORANGE COUNTY UTILITIES
Proj. Loc.: ORANGE COUNTY, FL

WESTERN REGIONAL WATER SUPPLY FACILITY
IMPROVEMENTS PHASE 3B

GROUND STORAGE TANK NO.3 ELECTRICAL PLAN

Project No.:	200-10034-12003
Designed By:	TW
Drawn By:	TN
Checked By:	PFH

E201

Copyright: Tetra Tech

Thursday, August 23, 2018 5:57:32 PM DRAWING: E:\PROJECTS\TT\TT01D Western\PHASE-3B\DWG\SheetFiles\ELEC\TT01D3B-E201.DWG LAYOUT: LAYOUT(1) USER NAME: WIN, THEIN

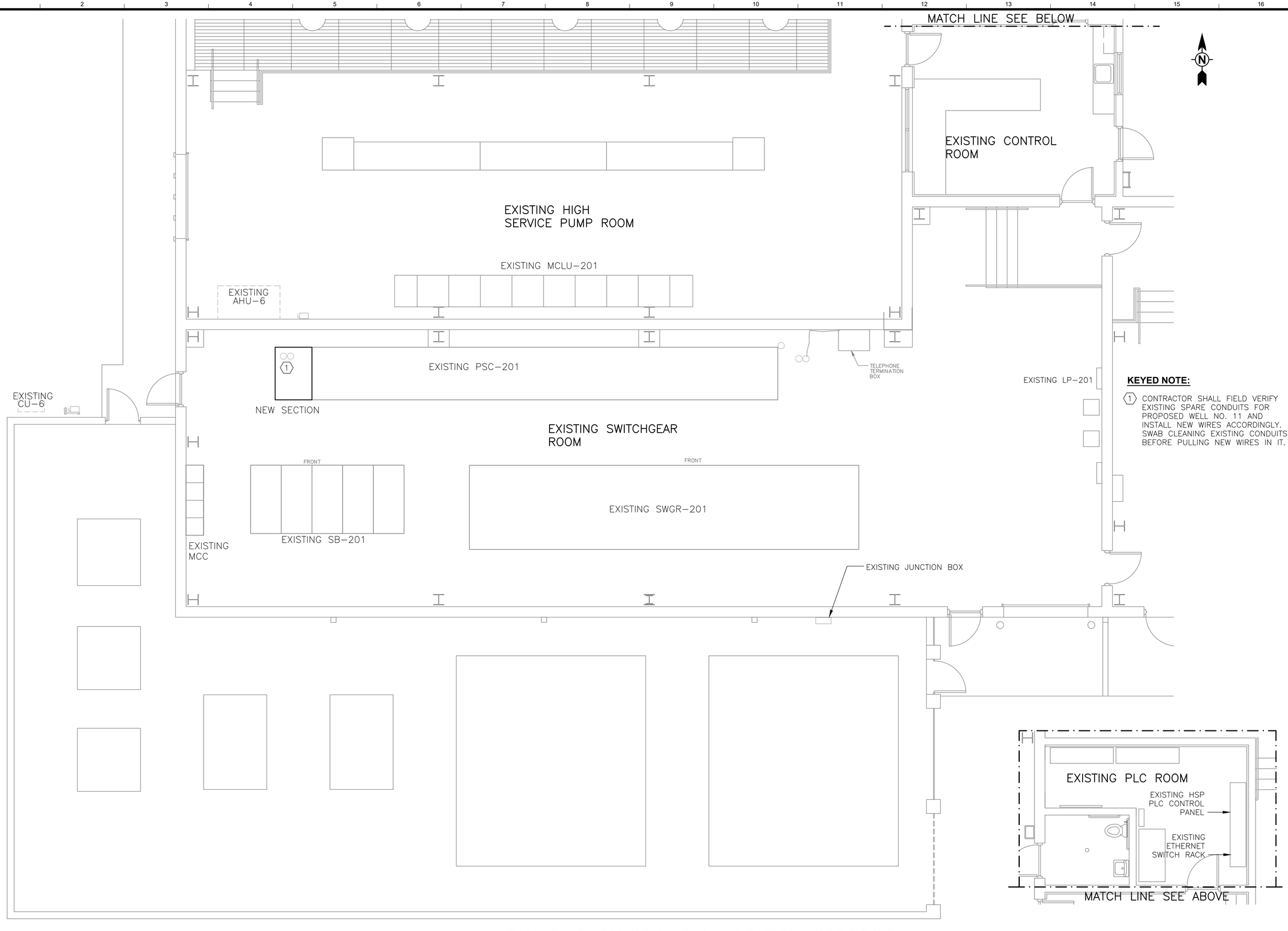

KEYED NOTE:

1. CONTRACTOR SHALL FIELD VERIFY EXISTING SPARE CONDUITS FOR PROPOSED WELL NO. 11 AND INSTALL NEW WIRES ACCORDINGLY. SWAB CLEANING EXISTING CONDUITS BEFORE PULLING NEW WIRES IN IT.

EXISTING HIGH SERVICE BUILDING – ELECTRICAL MODIFICATIONS

SCALE: 1/4" = 1'-0"

TETRA TECH
www.tetratech.com
201 EAST PINE STREET, SUITE 1000
ORLANDO, FL 32801
PHONE: 407-839-3955 FAX: 407-839-3790

HILLERS ELECTRICAL ENGINEERING, INC.
23257 STATE ROAD 7, SUITE 100
BOCA RATON, FLORIDA 33428
(561) 451-9165
(561) 451-9166 FAX
LICENSE NO: EB 0006977

BID SET

MARK	DATE	DESCRIPTION	BY

Client: ORANGE COUNTY UTILITIES
Proj. Loc.: ORANGE COUNTY, FL

WESTERN REGIONAL WATER SUPPLY FACILITY
IMPROVEMENTS PHASE 3B

HIGH SERVICE PUMP BUILDING - ELECTRICAL MODIFICATIONS

Project No.:	200-10034-12003
Designed By:	TW
Drawn By:	TN
Checked By:	PFH

E202

Copyright: Tetra Tech

Thursday, August 23, 2018 5:57:34 PM DRAWING: E:\PROJECTS\TT\TT01D Western\PHASE-3B\DWG\SheetFiles\ELEC\TT01D3B-E202.DWG LAYOUT: LAYOUT(1) USER NAME: WIN, THEIN

System No. C-AJ-1226

F Rating — 3 Hr
FT Rating — 0 Hr
FH Rating — 3 Hr
FTH Rating — 0 Hr
L Rating At Ambient — Less Than 1 CFM/Sq Ft
L Rating At 400 F — 4 CFM/Sq Ft

Hilti Firestop Systems

Reproduced by HILTI, Inc. Courtesy of Underwriters Laboratories, Inc.

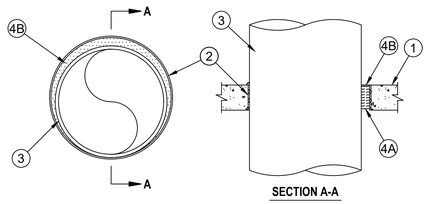

SECTION A-A

1. Floor or Wall Assembly — Min 4-1/2 in. thick reinforced lightweight or normal weight (100-150 pcf) concrete. Wall may also be constructed of any UL Classified Concrete Blocks*. Max diam of opening is 32 in.
2. Metallic Sleeve — (Optional) Nom 32 in. diam (or smaller) Schedule 40 (or heavier) steel sleeve cast or grouted into floor or wall assembly, flush with floor or wall surfaces or extending a max of 3 in. above floor or beyond both surfaces of wall.

2A. Sheet Metal Sleeve — (Optional) Max 6 in. diam, min 26 ga galv steel provided with a 26 ga galv steel square flange spot welded to the sleeve at approx mid-height, or flush with bottom of sleeve in floors, and sized to be a min of 2 in. larger than the sleeve diam. The sleeve is to be cast in place and may extend a max of 4 in. below the bottom of the deck and a max of 1 in. above the top surface of the concrete floor.

2B. Sheet Metal Sleeve — (Optional) - Max 12 in. diam, min 24 ga galv steel provided with a 24 ga galv steel square flange spot welded to the sleeve at approx mid-height, or flush with bottom of sleeve in floors, and sized to be a min of 2 in. larger than the sleeve diam. The sleeve is to be cast in place and may extend a max of 4 in. below the bottom of the deck and a max of 1 in. above the top surface of the concrete floor.

3. Through-Penetrant — One metallic pipe, tube or conduit to be installed either concentrically or eccentrically within the firestop system. The annular space between penetrant and periphery of opening shall be min 0 in. (point contact) to max 1-7/8 in. Penetrant may be installed with continuous point contact. Penetrant to be rigidly supported on both sides of floor or wall assembly. The following types and sizes of metallic penetrants may be used:
   A. Steel Pipe — Nom 30 in. diam (or smaller) Schedule 10 (or heavier) steel pipe.
   B. Iron Pipe — Nom 30 in. diam (or smaller) cast or ductile iron pipe.
   C. Copper Pipe — Nom 6 in. diam (or smaller) Regular (or heavier) copper pipe.
   D. Copper Tubing — Nom 6 in. diam (or smaller) Type L (or heavier) copper tubing.
   E. Conduit — Nom 6 in. diam (or smaller) steel conduit.
   F. Conduit — Nom 4 in. diam (or smaller) steel electrical metallic tubing (EMT).
4. Firestop System — The firestop system shall consist of the following:
   A. Packing Material — Min 4 in. thickness of min 4 pcf mineral wool batt insulation firmly packed into opening as a permanent form. Packing material to be recessed from top surface of floor or sleeve or from both surfaces of wall or sleeve as required to accommodate the required thickness of fill material.
   B. Fill, Void or Cavity Material* — Sealant — Min 1/4 in. thickness of fill material applied within the annulus, flush with top surface of floor or sleeve or with both surfaces of wall or sleeve. At the point or continuous contact locations between penetrant and concrete or sleeve, a min 1/4 in. diam bead of fill material shall be applied at the concrete or sleeve/ pipe penetrant interface on the top surface of floor and on both surfaces of wall.
   HILTI CONSTRUCTION CHEMICALS, DIV OF HILTI INC — FS-One Sealant

*Bearing the UL Classification Mark

CLASSIFIED UL C US

Classified by Underwriters Laboratories, Inc. to UL 1479 and CAN/ULC-S115

1 VAR. CONDUIT PENETRATION AT WALL OR SLAB

NOT TO SCALE

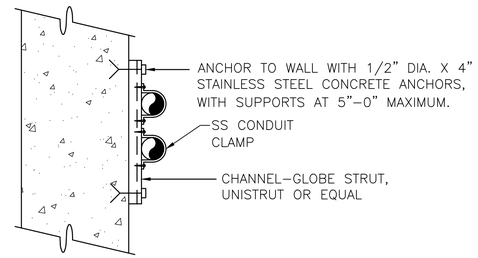

2 VAR. CONDUIT SUPPORT

NOT TO SCALE

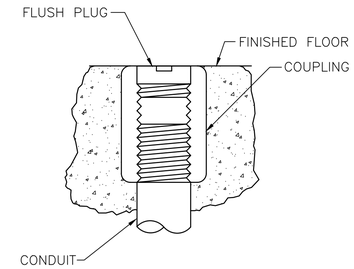

3 VAR. CONDUIT FLOOR STUB-UP

NOT TO SCALE

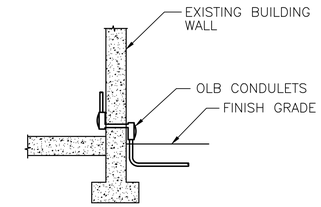

4 VAR. CONDUIT ENTRANCE

NOT TO SCALE

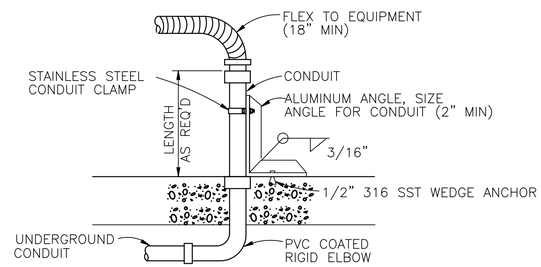

6 VAR. CONDUIT TRANSITION AND SUPPORT DETAIL

NOT TO SCALE

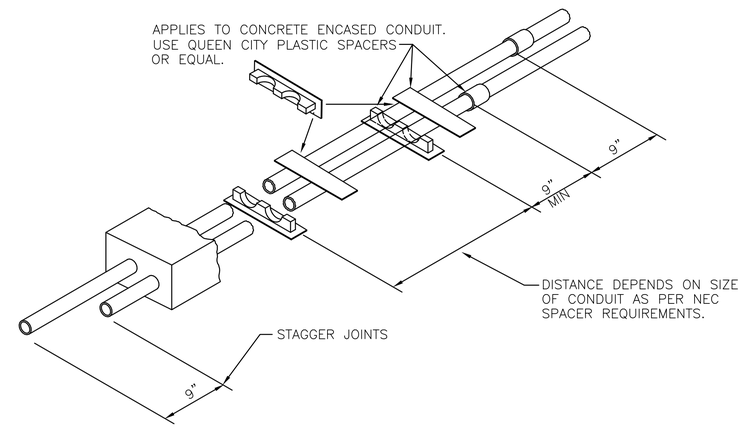

7 VAR. HORIZONTAL STAGGERING OF SPACERS AND JOINTS

NOT TO SCALE

NOTES:
1. THIS DETAIL TYPICAL FOR BOTH HORIZONTAL MOUNTING.
2. CHANNEL AND ALL SUPPORT DEVICES TO BE STAINLESS STEEL. CONDUIT CLAMPS SHALL BE S.S.
3. CHANNELS TO BE SPACED 5' MAXIMUM.

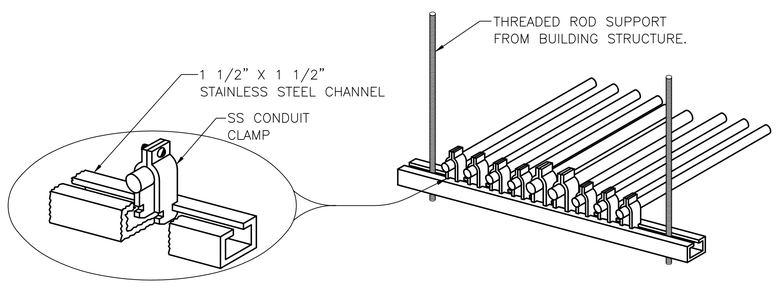

CONDUIT PIPE STRAP MOUNTING DETAILS

5 VAR. CONDUIT SUPPORT

NOT TO SCALE

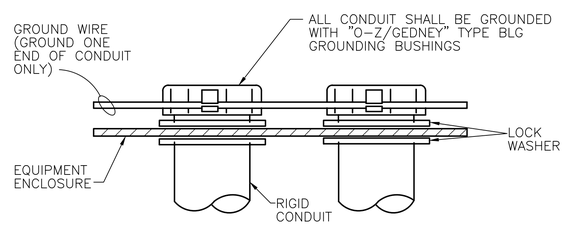

8 VAR. CONDUIT GROUNDING

NOT TO SCALE

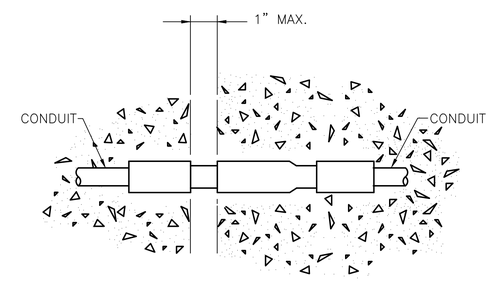

9 VAR. EXPANSION COUPLING

NOT TO SCALE

TETRA TECH
www.tetratech.com
201 EAST PINE STREET, SUITE 1000
ORLANDO, FL 32801
PHONE: 407-839-3955 FAX: 407-839-3790

HILLERS ELECTRICAL ENGINEERING, INC.
23257 STATE ROAD 7, SUITE 100
BOCA RATON, FLORIDA 33428
(561) 451-9165
(561) 451-9166 FAX
LICENSE No: EB 0006977

BID SET

MARK	DATE	DESCRIPTION	BY

Client: ORANGE COUNTY UTILITIES
Proj. Loc.: ORANGE COUNTY, FL

WESTERN REGIONAL WATER SUPPLY FACILITY
IMPROVEMENTS PHASE 3B

ELECTRICAL DETAILS - SHEET 1

Project No.:	200-10034-12003
Designed By:	TW
Drawn By:	TN
Checked By:	PFH

E501

Copyright: Tetra Tech

Thursday, August 23, 2018 5:57:40 PM DRAWING: E:\PROJECTS\TT\TT01D Western\PHASE-3B\DWG\SheetFiles\ELEC\TT01D3B-E501.DWG LAYOUT: LAYOUT(1) USER NAME: WIN, THEIN

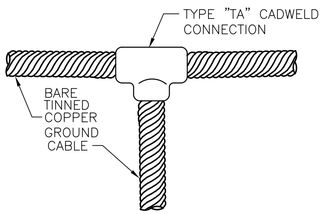

10 VAR. GROUND CABLE CONNECTION
NOT TO SCALE

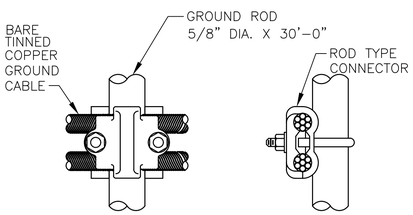

14 VAR. CABLE TO ROD CONNECTION
NOT TO SCALE

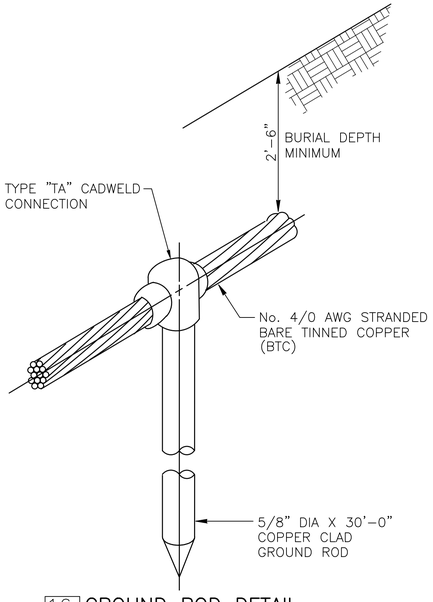

16 VAR. GROUND ROD DETAIL
NOT TO SCALE

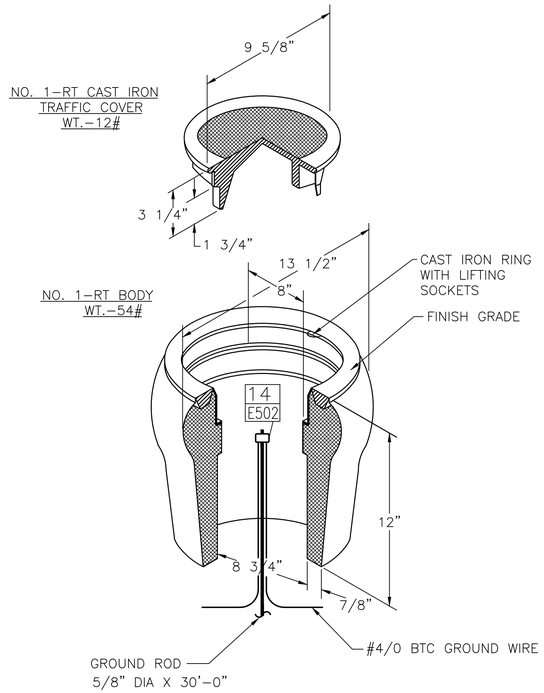

11 VAR. GROUND TEST WELL DETAIL
NOT TO SCALE

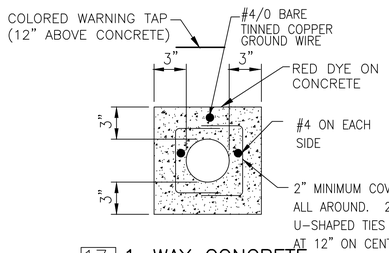

17 VAR. 1-WAY CONCRETE ENCASED DUCTBANK
NOT TO SCALE

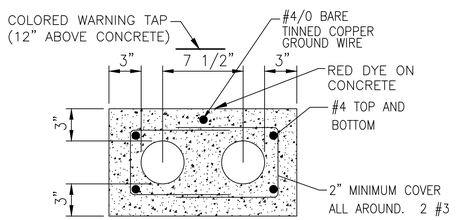

19 VAR. 2-WAY CONCRETE ENCASED DUCTBANK
NOT TO SCALE

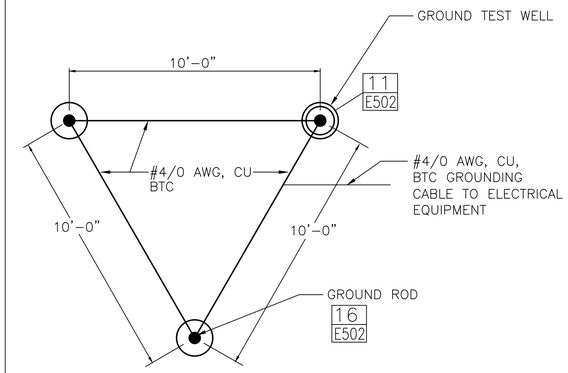

12 VAR. GROUNDING DELTA LAYOUT
NOT TO SCALE

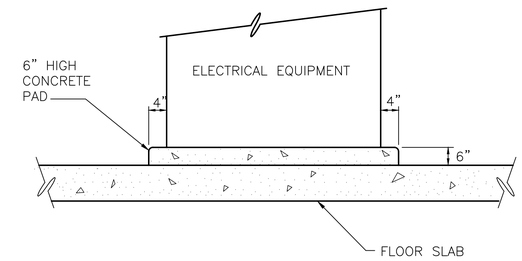

13 VAR. EQUIPMENT HOUSE KEEPING PAD
NOT TO SCALE

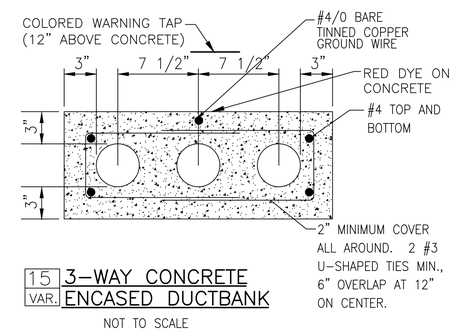

15 VAR. 3-WAY CONCRETE ENCASED DUCTBANK
NOT TO SCALE

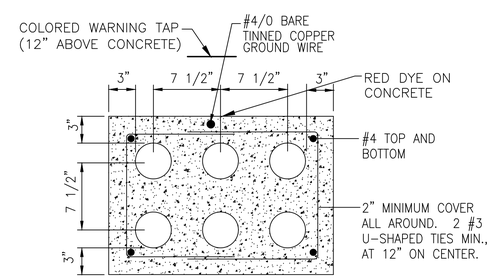

20 VAR. 6-WAY CONCRETE ENCASED DUCTBANK
NOT TO SCALE

NOTES FOR ALL DUCTBANK DETAILS

1. 3" SEPARATION BETWEEN THE CONDUITS IS ONLY FOR CONDUITS WITH THE SAME VOLTAGE LEVEL. FOR DIFFERENT VOLTAGE, ADJUST THE SEPARATION AS PER NOTE 23 ON DRAWING E2.
2. FOR DUCTBANKS WITH CONDUIT QUANTITY DIFFERENT THAN THE DETAILS, ARRANGE THE DUCTBANK WITH THE COMBINATION OF APPROPRIATE DUCTBANK DETAILS.

TETRA TECH
www.tetratech.com
201 EAST PINE STREET, SUITE 1000
ORLANDO, FL 32801
PHONE: 407-839-3955 FAX: 407-839-3790

HILLERS ELECTRICAL ENGINEERING, INC.
23257 STATE ROAD 7, SUITE 100
BOCA RATON, FLORIDA 33428
(561) 451-9165
(561) 451-9166 FAX
LICENSE NO: EB 0006977

BID SET

MARK	DATE	DESCRIPTION	BY

Client: ORANGE COUNTY UTILITIES
Proj. Loc.: ORANGE COUNTY, FL

WESTERN REGIONAL WATER SUPPLY FACILITY
IMPROVEMENTS PHASE 3B

ELECTRICAL DETAILS - SHEET 2

Project No.:	200-10034-12003
Designed By:	TW
Drawn By:	TN
Checked By:	PFH

E502

Copyright: Tetra Tech

Thursday, August 23, 2018 5:57:45 PM DRAWING: E:\PROJECTS\TT\T01D Western\PHASE-3B\DWG\SheetFiles\ELEC\TT01D3B-E502.DWG LAYOUT: LAYOUT(1) USER NAME: WIN, THEIN

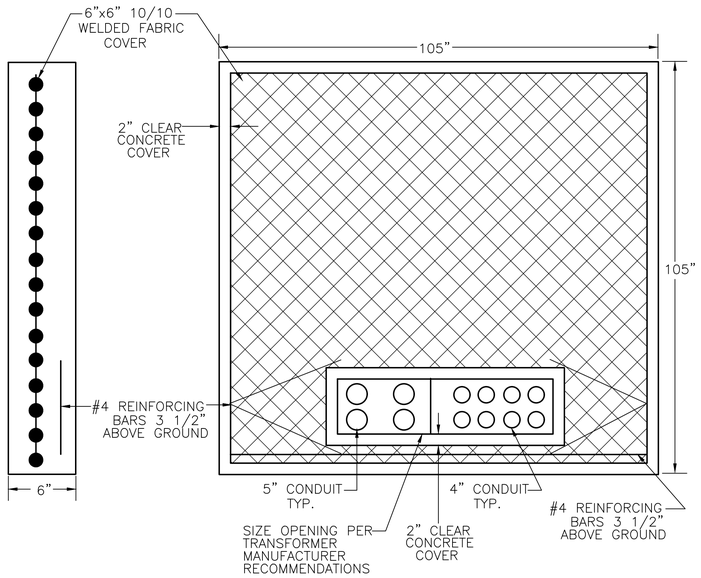

NOTE:
1. INSTALL THREADED INSERTS AS REQUIRED BY TRANSFORMER MANUFACTURER TO ANCHOR TRANSFORMER TO PAD.
2. COORDINATE ALL REQUIREMENTS WITH POWER UTILITY

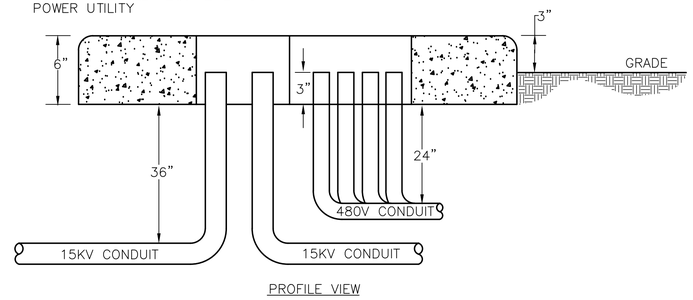

20 VAR. TRANSFORMER PAD DETAIL
NOT TO SCALE

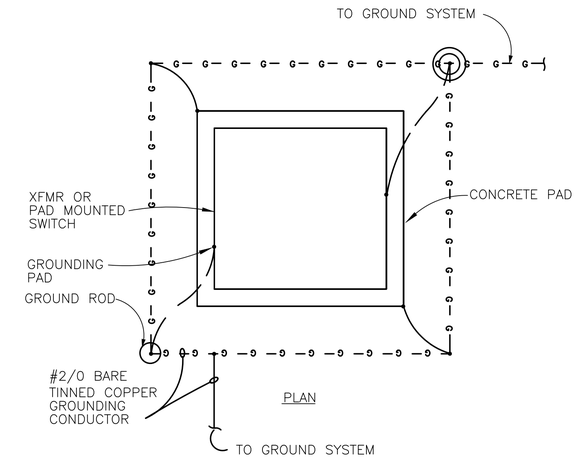

21 VAR. PAD MOUNTED TRANSFORMER GROUNDING
NOT TO SCALE

TETRA TECH
www.tetratech.com
201 EAST PINE STREET, SUITE 1000
ORLANDO, FL 32801
PHONE: 407-839-3955 FAX: 407-839-3790

HILLERS ELECTRICAL ENGINEERING, INC.
23257 STATE ROAD 7, SUITE 100
BOCA RATON, FLORIDA 33428
(561) 451-9165
(561) 451-9166 FAX
LICENSE NO: EB 0006977

BID SET

MARK	DATE	DESCRIPTION	BY

Client: ORANGE COUNTY UTILITIES
Proj. Loc.: ORANGE COUNTY, FL

WESTERN REGIONAL WATER SUPPLY FACILITY
IMPROVEMENTS PHASE 3B

ELECTRICAL DETAILS - SHEET 3

Project No.:	200-10034-12003
Designed By:	TW
Drawn By:	TN
Checked By:	PFH

E503

Copyright: Tetra Tech

Thursday, August 23, 2018 5:57:49 PM DRAWING: E:\PROJECTS\TTNTT01D Western\PHASE-3B\DWG\SheetFiles\ELEC\TT01D3B-E503.DWG LAYOUT: LAYOUT(1) USER NAME: WIN, THEIN

INSTRUMENTATION LEGEND

INSTRUMENT SOCIETY OF AMERICA TABLE

LETTER	FIRST LETTER: PROCESS OR INITIATING VARIABLE	FIRST LETTER: MODIFIER	SUCCEEDING LETTERS: READOUT OR PASSIVE FUNCTION	SUCCEEDING LETTERS: OUTPUT FUNCTION	SUCCEEDING LETTERS: MODIFIER
A	ANALYSIS (*)		ALARM		USERS CHOICE (*)
B	BURNER FLAME		USERS CHOICE (*)	USERS CHOICE (*)	
C	CONDUCTIVITY			CONTROL	CLOSE
D	DENSITY (S.G.)	DIFFERENTIAL			
E	VOLTAGE		PRIMARY ELEMENT		
F	FLOW RATE	RATIO			
G	GAUGE		GLASS	GATE	
H	HAND (MANUAL)				HIGH
I	CURRENT		INDICATE		
J	POWER	SCAN			
K	TIME OR SCHEDULE			CONTROL STATION	
L	LEVEL		LIGHT (PILOT)		LOW
M	MOTION				MIDDLE
N	STROKE		USERS CHOICE (*)	USERS CHOICE (*)	NORMAL
O	LOOP VEH. DETECTOR		ORIFICE		OPEN
P	PRESSURE OR VACUUM		POINT (TEST CONNECTION)		
Q	QUANTITY OR EVENT		INTEGRATE		
R	RATIO		RECORD OR PRINT		
S	SPEED OR FREQUENCY	SAFETY		SWITCH	
T	TEMPERATURE			TRANSMIT	
U	MULTIVARIABLE (*)		MULTIFUNCTION (*)		
V	VISCOSITY			VALVE	
W	WEIGHT OR FORCE		WELL		
X	UNCLASSIFIED (*)		UNCLASSIFIED (*)	UNCLASSIFIED (*)	UNCLASSIFIED (*)
Y	PHOTO CELL		LIGHT SOURCE	RELAY OR COMPUTE (*)	
Z	POSITION			DRIVE, ACTUATE OR UNCLASSIFIED FINAL CONTROL ELEMENT	

(*) WHEN USED, EXPLANATION IS SHOWN ADJACENT TO INSTRUMENT SYMBOL

INSTRUMENT IDENTIFICATION

F I TX
001

- FIRST LETTER(S)
- SUCCEED LETTERS
- LOOP NO. MODIFIER (USED WITH TWO OR MORE INSTRUMENTS HAVING SAME FUNCTIONAL LOOP IDENTIFICATION)

FIELD MOUNTED INSTRUMENT

REAR OF PANEL MOUNTED INSTRUMENT

FRONT OF PANEL MOUNTED INSTRUMENT

I — INTERLOCK (OFTEN LOCATED IN MCC)

PLC (PROGRAMMABLE LOGIC CONTROLLER)

TELEMETRY EQUIPMENT

ALARM ANNUNCIATOR OR STATUS INDICATING LIGHT

—o— FIBER OPTIC CABLE

OLM — OPTICAL LINK MODULE

MSC — MANUFACTURER SUPPLIED CABLE

—··— ETHERNET CABLE (CAT 6e)

INSTRUMENT ABBREVIATION (I&C ONLY)

ACC	ACCELATOR
BFP	BELT FILTER PRESS
CL2	CHLORINE
CLW	CLEARWELL
COM	COMMON
COND	CONDUCTIVITY
CP	CONTROL PANEL
DI, AI	DISCRETE INPUT, ANALOG INPUT
DO, AO	DISCRETE OUTPUT, ANALOG OUTPUT
D.O.	DISSOLVED OXYGEN
DR	DISTANCE RELAY
EFFL	EFFLUENT
EP	ELECTRICAL PANEL
ES	EMERGENCY STOP
ETM	ELAPSED TIME METER
FD	CHEMICAL FEEDER
FIL	FILTER
GEN	GENERATOR
HLO	HIGH–LOW–OFF
HLOR	HIGH–LOW–OFF–REMOTE
HOA	HAND–OFF–AUTO
HOTC	HAND–OFF–TIMER–COMPUTER
H/L	HIGH/LOW
HSP	HIGH SERVICE PUMP
INFL	INFLUENT
JP	JOCKEY PUMP
LOS	LOCK–OUT–STOP
LPU	LINE PROTECTION UNIT
MCC	MOTOR CONTROL CENTER
MCP	MAIN CONTROL PANEL
ME	MISCELLANEOUS EQUIPMENT
M.G.	MILLION GALLON
MOV	MOTOR OPERATED VALVE
OCA	OPEN–CLOSE–AUTO
OC	OPEN–CLOSE
OO	ON–OFF
ORP	OXIDATION REDUCTION POTENTIAL
OSC	OPEN–STOP–CLOSE
OSCR	OPEN–STOP–CLOSE–REMOTE
PH	HYDROGEN ION CONCENTRATION
PRES	PRESSURE
RES	RESTORE
RF	RF (ADMITTANCE) LEVEL MONITOR
RIP	REMOTE I/O PANEL
R/L	REMOTE/LOCAL
RSP	REMOTE SETPOINT
SA	SURGE ARRESTER
SEC	SECONDARY
SL	SLAKER
SF	SONIC FLOWMETER
SP	SETPOINT
SS	START/STOP
ST	STEP
STOR	STORAGE
SUS	SUSPENDED SOLIDS
TD	THERMAL DISPERSION
TP	TRANSFER PUMP
TURB	TURBIDITY
VFD	VARIABLE FREQUENCY DRIVE

NOTES:

1. COMPONENTS AND PANELS SHOWN WITH A DIAMOND (◆) ARE TO BE PROVIDED UNDER SECTION "INSTRUMENTATION & CONTROLS".
2. COMPONENTS AND PANELS SHOWN WITH A DOUBLE ASTERISK (✳✳) ARE TO BE PROVIDED AS PART OF A PACKAGED OR MECHANICAL SYSTEM.
3. COMPONENTS AND PANELS SHOWN WITH A TRIANGLE (▲) ARE EXISTING.
4. COMPONENTS AND PANELS SHOWN WITH A HEXAGON (⬢) ARE EXISTING TO BE MODIFIED AND/OR RELOCATED.
5. COMPONENTS AND PANELS SHOWN WITH A SQUARE (■) ARE FUTURE.
6. DURING SHOP DRAWING PREPARATION, THE CONTRACTOR SHALL FIELD VERIFY ALL THE EXISTING ANALOG AND DISCRETE POINTS FOR DETAILED INTERFACE AND INCLUDE IT AS PART OF SUBMITTAL.
7. THE SINGLE INSTRUMENT & CONTROL SUPPLIER SHALL HAVE A U.L. 508A APPROVED SHOP.
8. ALL PROCESS TUBING AND ISOLATION VALVES SHALL BE 1/4"– 316 S.S., UNLESS OTHERWISE NOTED.
9. ALL CONTROL PANELS SHALL BE FURNISHED AND INSTALLED WITH A 1P–15A CIRCUIT BREAKER.

PUMPS & COMPRESSORS

CENTRIFUGAL PUMP

CENTRIFUGAL PUMP OR TURBINE PUMP

COMPRESSOR

EDUCTOR

METERING PUMP

PROGRESSING CAVITY PUMP

M — MIXER

ACTUATOR OR OPERATORS

S — SOLENOID

M — MOTOR

H — HYDRAULIC

PRIMARY ELEMENTS

WEIR

ORIFICE PLATE

VENTURI

PROPELLER METER

ROTAMETER

ELECTROMAGNETIC FLOWMETER

LEVEL (BUBBLE TUBE)

LEVEL (FLOAT)

LEVEL (ULTRASONIC)

B — BLANKET LEVEL DETECTOR

ULTRASONIC TRANSIT–TIME FLOWMETER/DOPPLER (CLAMP–ON)

PARSHALL FLUME

X — DENSITY METER (X: N = NUCLEAR, O = OPTICAL, U = ULTRASONIC)

PITOT–STATIC

VORTEX METER

SUSPENDED SOLIDS

PE, PIT — ISOLATING DIAPHRAGM

INSTRUMENT LINE SYMBOLS

PRIMARY PROCESS FLOW

FUTURE PRIMARY PROCESS FLOW

SECONDARY PROCESS FLOW, CONNECTION TO PROCESS FLOW, MECHANICAL LINK OR INSTRUMENT SUPPLY

ELECTRICAL SIGNAL (DISCRETE)

A — ELECTRICAL SIGNAL (ANALOG)

PNEUMATIC SIGNAL

FIBER OPTIC DATA HIGHWAY

X — PROCESS OR SIGNAL CONTINUED SOMEWHERE ELSE (X=1,2,3,...)

VALVES & GATES

BUTTERFLY

VALVE

SWING CHECK

BALL

GLOBE

DIAPHRAGM

PLUG

3–WAY GLOBE

GATE

PRESSURE RELIEF VALVE

REDUCER

DISC CHECK VALVE

S — PRESSURE SUSTAINING VALVE (SOLENOID OPER

D — DRAIN

VENT — VACUUM REGULATING CHECK VALVE

INJECTOR

PULSATION DAMPENER

TETRA TECH
www.tetratech.com
201 EAST PINE STREET, SUITE 1000
ORLANDO, FL 32801
PHONE: 407-839-3955 FAX: 407-839-3790

HILLERS ELECTRICAL ENGINEERING, INC.
23257 STATE ROAD 7, SUITE 100
BOCA RATON, FLORIDA 33428
(561) 451-9165
(561) 451-9166 FAX
LICENSE NO: EB 0006977

BID SET

MARK	DATE	DESCRIPTION	BY

Client: ORANGE COUNTY UTILITIES
Proj. Loc.: ORANGE COUNTY, FL

WESTERN REGIONAL WATER SUPPLY FACILITY
IMPROVEMENTS PHASE 3B

INSTRUMENTATION LEGEND AND SYMBOLS

Project No.:	200-10034-12003
Designed By:	TW
Drawn By:	TN
Checked By:	PFH

I001

Copyright: Tetra Tech

Thursday, August 23, 2018 5:57:54 PM DRAWING: E:\PROJECTS\TTT01D Western\PHASE-3B\DWG\SheetFiles\ELEC\TT01D3B-I001.DWG LAYOUT: I-1 USER NAME: WIN_THEIN

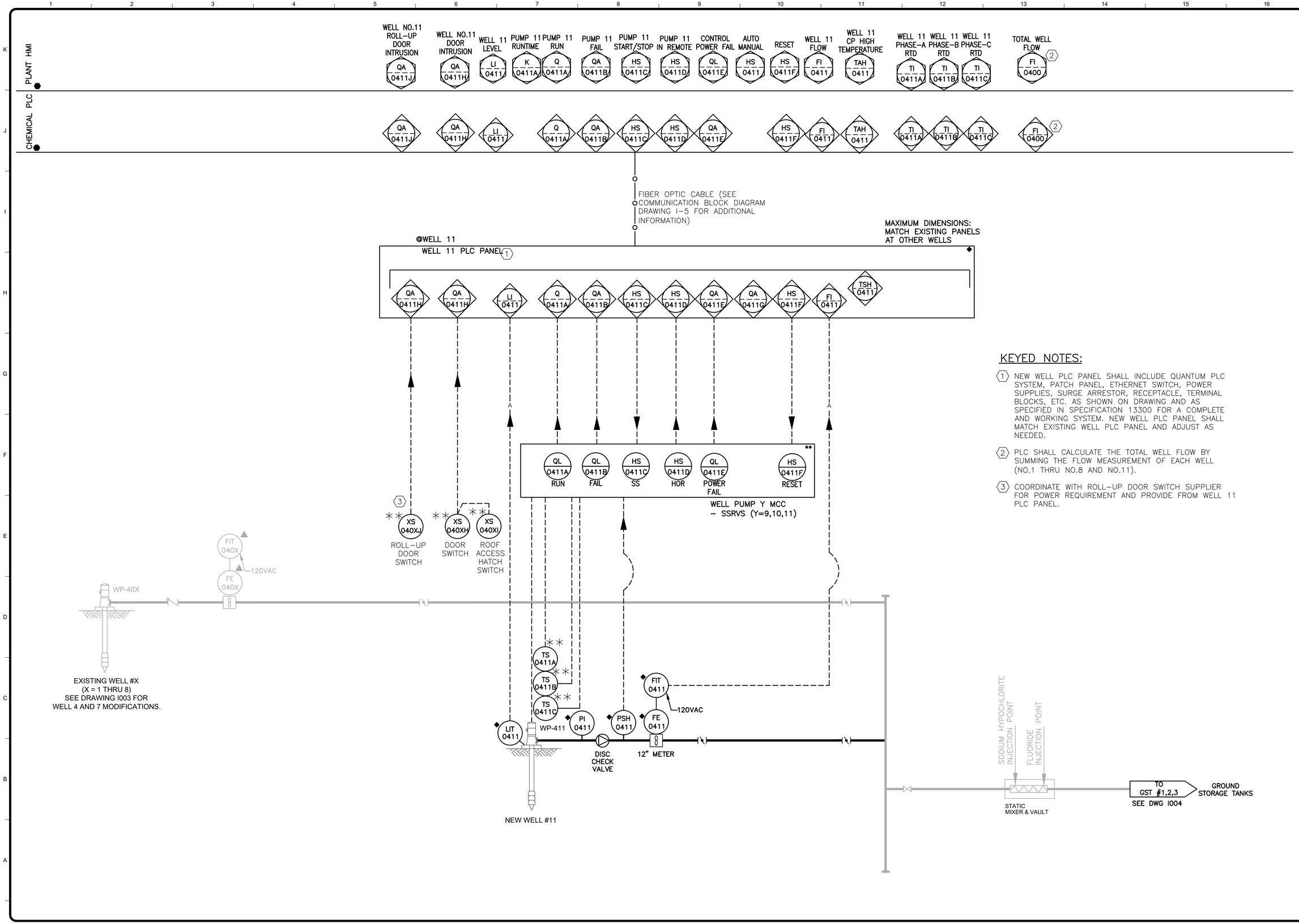

KEYED NOTES:

1. NEW WELL PLC PANEL SHALL INCLUDE QUANTUM PLC SYSTEM, PATCH PANEL, ETHERNET SWITCH, POWER SUPPLIES, SURGE ARRESTOR, RECEPTACLE, TERMINAL BLOCKS, ETC. AS SHOWN ON DRAWING AND AS SPECIFIED IN SPECIFICATION 13300 FOR A COMPLETE AND WORKING SYSTEM. NEW WELL PLC PANEL SHALL MATCH EXISTING WELL PLC PANEL AND ADJUST AS NEEDED.
2. PLC SHALL CALCULATE THE TOTAL WELL FLOW BY SUMMING THE FLOW MEASUREMENT OF EACH WELL (NO.1 THRU NO.8 AND NO.11).
3. COORDINATE WITH ROLL-UP DOOR SWITCH SUPPLIER FOR POWER REQUIREMENT AND PROVIDE FROM WELL 11 PLC PANEL.

TETRA TECH
www.tetratech.com
201 EAST PINE STREET, SUITE 1000
ORLANDO, FL 32801
PHONE: 407-839-3955 FAX: 407-839-3790

HILLERS ELECTRICAL ENGINEERING, INC.
23257 STATE ROAD 7, SUITE 100
BOCA RATON, FLORIDA 33428
(561) 451-9165
(561) 451-9485 FAX
LICENSE NO: EB 0006977

BID SET

MARK	DATE	DESCRIPTION	BY

Client: ORANGE COUNTY UTILITIES
Proj. Loc.: ORANGE COUNTY, FL

WESTERN REGIONAL WATER SUPPLY FACILITY
IMPROVEMENTS PHASE 3B

P&ID - WELLS

Project No.:	200-10034-12003
Designed By:	TW
Drawn By:	TN
Checked By:	PFH

I002

Copyright: Tetra Tech

Thursday, August 23, 2018 5:57:59 PM DRAWING: E:\PROJECTS\TT\TT01D Western\PHASE-3B\DWG\SheetFiles\ELEC\TT01D3B-I002.DWG LAYOUT: I-2 USER NAME: WIN, THEIN

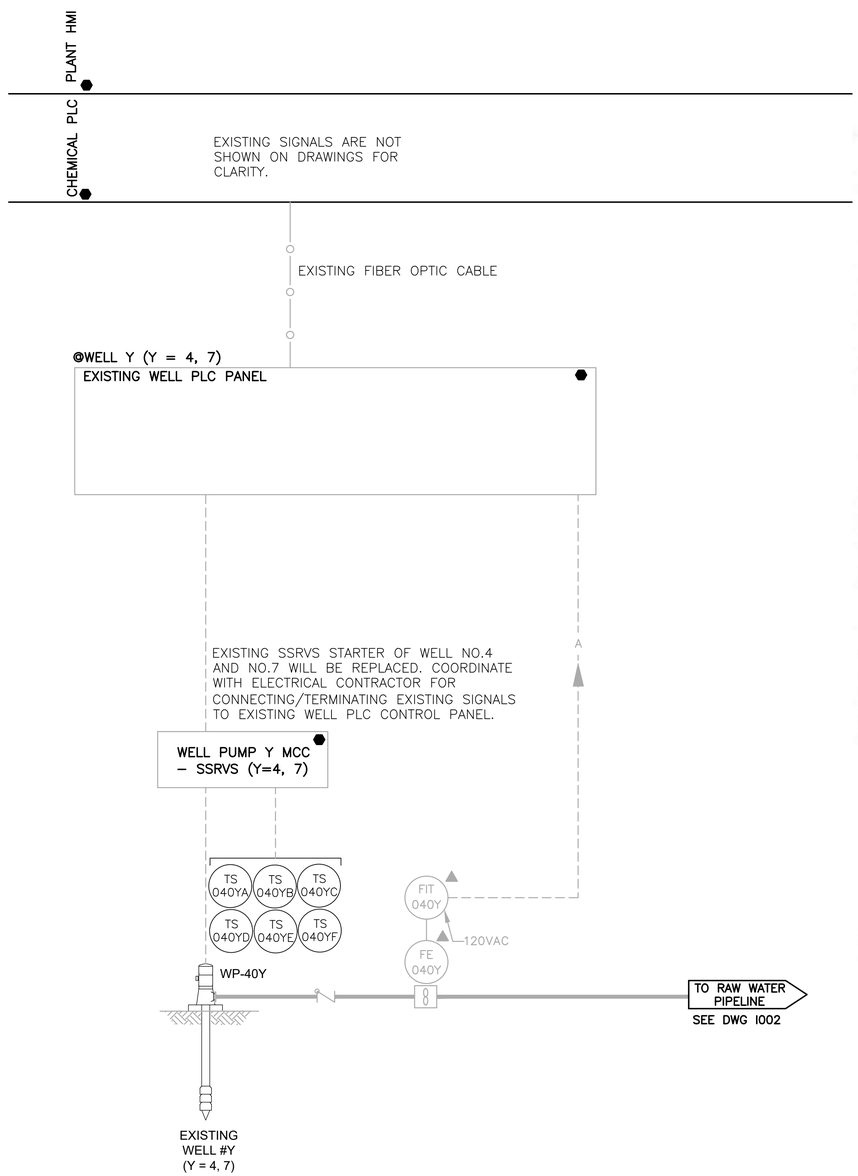

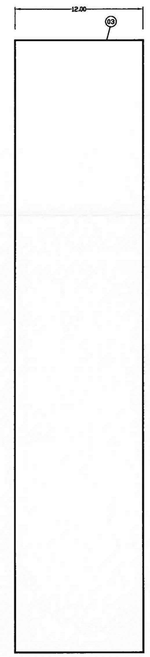

LEFT SIDE PANEL ELEVATION

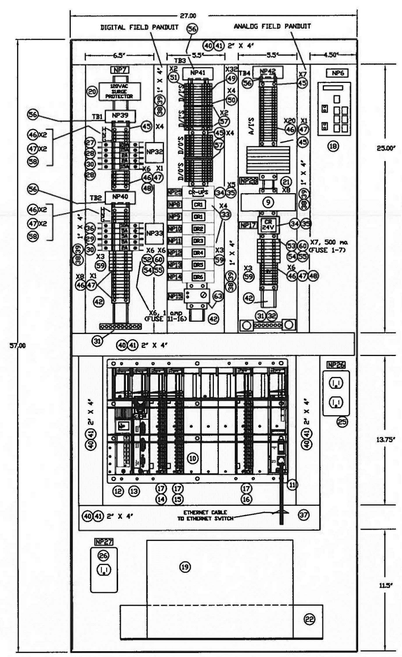

BACK PANEL ELEVATION

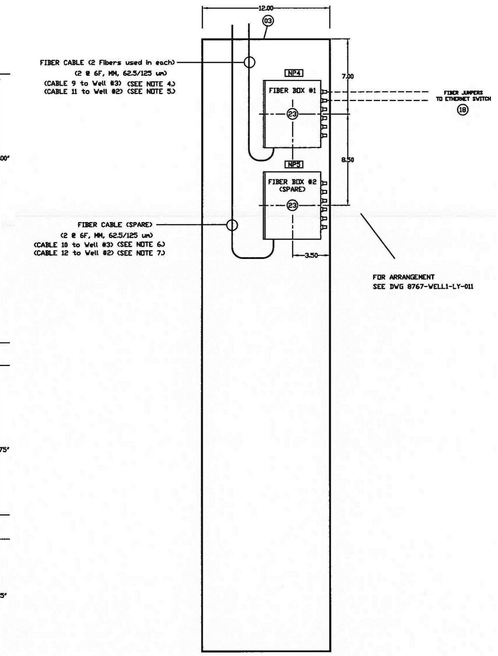

RIGHT SIDE PANEL ELEVATION

NOTE:

1. FOR BACKPANEL & SIDE PANEL LAYOUT SEE DRAWING 8767-WELL1-LY-002
2. FOR BILL OF MATERIAL SEE DWG 8767-WELL1-BOM-003
3. FOR NAMEPLATES SEE DWG 8767-WELL1-NP-004
4. CABLE #9 ON DRAWING 8767-FIBER-NET-001.
5. CABLE #11 ON DRAWING 8767-FIBER-NET-001.
6. CABLE #10 ON DRAWING 8767-FIBER-NET-001.
7. CABLE #12 ON DRAWING 8767-FIBER-NET-001.
8. THE TWO FIBER BOXES ARE MOUNTED ON THE SIDE ASSOCIATED WITH FIBER ENTRY FROM THE TOP OF THE PANEL. THE OPPOSITE SIDE PANEL IS COMPLETELY EMPTY.

CURRYCONTROLSCOMPANY
4245 S. Pipkin Road • Lakeland• FL 33811
P.O. Drawer 5408 • Lakeland, FL 33807
(863) 646-5781 • FAX: (863) 646-3899

ORANGE COUNTY UTILITIES
WESTERN REGIONAL WSF
PHASE 3A
PROJECT

WELL 1 PLC CONTROL PANEL
BACK PLATE LAYOUT

BILL OF MATERIAL

ITEM	QTY.	MANUFACTURER	CATALOG NO.	DESCRIPTION	(SCCR) SHORT CKT. CURRENT RATING
01	1	SAGINAW	60EL3016SSLPPL	ENCLOSURE 60"H X 30"W X 16"D, NEMA 4X, 304 SS, PAINTED WHITE, BLACK ZINC DIE CAST HANDLE w/ SCE LOCK (LOCKABLE)	
02	1	SAGINAW	SCE-60P30	BACK PANEL 57"H X 27"W, WHITE C.S.	
03	2	SAGINAW	57" X 12" SIDE PNL	SIDE PANEL 57"H X 12"W, WHITE C.S.	
04	1	SAGINAW	SCE-LF16D18NO	18" FLUORESCENT LIGHT WITH AUTO DOOR SWITCH	
05	1	SAGINAW	SCE-FK1265S	12" HIGH x 16" WIDE X 9.123" DEEP 304 SS FOOT KIT, PAINTED WHITE	
06	1	SPD	SKS113H2	2-POSN MAINTAINED SS WITH TWO KA-1 CONTACT BLOCKS	
07	1	HOFFMAN	A-LFSVD	DOOR INSTRUSION SWITCH	
08					
09	1	PHOENIX CONTACT	TRIO-PS/1AC/24DC/2.5 P/N 2866268	2.5 A 24VDC POWER SUPPLY DIN RAIL MTD.	
10	1	MODICON	140XBP01000	QUANTUM 10 SLOT I/O RACK	
11	1	MODICON	140NOE77101	QUANTUM ETHERNET MODULE	
12	1	MODICON	140CPS11420	QUANTUM 115VAC 11A SUMMABLE POWER SUPPLY MODULE	
13	1	MODICON	140CPU11303	QUANTUM CPU 512K RAM, 16K USER LOGIC 1 MODBUS+ & 1 MODBUS PORT	
14	1	MODICON	140DAI54000	QUANTUM 16 PT. 115VAC DIGITAL INPUT MODULE	
15	1	MODICON	140DRA84000	QUANTUM 16 PT. RELAY OUTPUT MODULE	
16	1	MODICON	140ACI03000	QUANTUM 8 CHANNEL ANALOG INPUT MODULE	
17	3	MODICON	140XTS00200	QUANTUM ACCESSORIES, 40 POINT I/O TERMINAL BLOCK	
18	1	HIRSCHMANN	RS20-0800M2M2SAABHH	6 COPPER ETHERNET PORTS 2 MULIT MODE SC FIBER PORTS	
19	1	EATON	PW9130L700T	UPS - DOUBLE CONVERSION 120V 700VA	
20	1	MTL	MA15/D/1/IS	120 VAC SURGE PROTECTOR	10kA (120VAC)
21	8	MTL	SS32X	ANALOG SURGE PROTECTOR	10kA
22	1	HOFFMAN	ESH198	19" WIDE x 8" DEEP x 3" HIGH SHELF	
23	2	CORNING	SPH-01P	CORNING SINGLE FIBER HOUSING PANEL	
24					
25	1	PASS & SEYMOUR	2094-I	GFCI RECEPTACLE & COVER W/ BOX (ELE0004, 0001, 0020) (SERVICE)	25kA (120VAC)
26	1	PASS & SEYMOUR	5351-I	SINGLE RECEPT. & COVER W/ BOX & BUSH. (ELE0006, 0001, 0020) (UPS)	25kA (120VAC)
27	1	EATON	WMZT1C20	1 POLE 20 AMP CIRCUIT BREAKER (120/240VAC) (CB-1)	10kA (120VAC)
28	2	EATON	WMZT1C15	1 POLE 15 AMP CIRCUIT BREAKER (120/240VAC) (CB-2, CB-5)	10kA (120VAC)
29	3	EATON	WMZT1C05	1 POLE 5 AMP CIRCUIT BREAKER (120/240VAC) (CB-7, CB-8, CB-9)	10kA (120VAC)
30	3	EATON	WMZT1C02	1 POLE 2 AMP CIRCUIT BREAKER (120/240VAC) (CB-3, CB-4,,CB-10)	10kA (120VAC)
31	2	SQUARE D	1130 PK7GTA	GROUND BAR KIT (FUS0032)	
32	1	SQUARE D	PKGTAB	GROUND BAR INSULATOR KIT (FUS0036)	
33	7	OMRON	LY2I4N 120VAC	RELAY 2PDT 10A CONTROL RELAY WITH PILOT LIGHT AND 120VAC COIL	
34	2	OMRON	LY2I4N 24VDC	RELAY 2PDT 10A CONTROL RELAY WITH PILOT LIGHT AND 24VDC COIL	
35	9	OMRON	PTF083A-E	8 PIN BASE FOR CONTROL RELAYS	
36	1	EATON	WMZT1C10	1 POLE 10 AMP CIRCUIT BREAKER (120/240VAC) (CB-6)	10kA (120VAC)
37	1	CABLESYS	GCPD8SS607-BL	CAT6 PATCH CORD W/SNAGLESS BOOT 7FT BLUE	
38	1	PANDUIT	G1X4VH6	1" X 4" PANDUIT	
39	1	PANDUIT	C1VH6	1" PANDUIT COVER	
40	2	PANDUIT	G2X4VH6	2" X 4" PANDUIT	
41	2	PANDUIT	C2VH6	2" PANDUIT COVER (PAN0015)	
42	2	WEIDMULLER	S1450	TS-35 X 7.5 (2M) DIN RAIL (PNL0040)	

BILL OF MATERIAL

ITEM	QTY.	MANUFACTURER	CATALOG NO.	DESCRIPTION	(SCCR) SHORT CKT. CURRENT RATING
45	15	WAGO	249-117	TERMINAL END BLOCK (TBL0082)	
46	44	ENTRELEC	115116.07	TERMINAL BLOCK M4/6 (TBL0001)	10kA
47	8	ENTRELEC	118368.16	TERMINAL BLOCK END COVER (TBL0002)	
48	3	ENTRELEC	168973.07	BJM6 10 POLE TERMINAL JUMPER (TBL0026)	
49	32	ENTRELEC	115271.22	2 TIER TERMINAL BLOCK M4/6ZQ2 (TBL0014)	10kA
50	4	ENTRELEC	118499.23	2 TIER TERMINAL BLOCK END COVER (TBL0010)	
51	2	ENTRELEC	173520.22	PJM6D 2 TIER TERMINAL JUMPER (TBL0021)	
52	6	ENTRELEC	115661.21	M4/8SFL FUSE TERM BLOCK FOR 110VAC WITH BLOWN FUSE INDICATOR	10kA
53	7	ENTRELEC	115663.23	M4/8SFD FUSE TERM BLOCK FOR 24VDC WITH BLOWN FUSE INDICATOR	
54	2	ENTRELEC	116953.15	FUSE BLOCK END COVER FEM8S (TBL0005)	
55	2	ENTRELEC	173523.11	FUSE BLOCK COMB JUMPER (TBL0030)	
56	4	ENTRELEC	113084.01	MARKER HOLDER PEM8 (TBL0037)	
57	3	ENTRELEC	118495.17	GREY SEPARATOR END SECTION SCF6.0	
58	2	ENTRELEC	163114R1700	GROUND TERMINAL BLOCK	
59	9	ENTRELEC	RAF1291-10-A	DIN RAIL ALUMINUM STANDOFF (PNL0042)	
60	7/6	BUSSMAN	AMP/500mA	GMA-1A FOR FUSES 11-17 & FUSE 6 GMA-500mA FOR FUSES 1-5 AND FUSE 7.	1A/500mA FUSE 10kA (120VAC)
61	1	HOFFMAN	TCP41UL12	NEMA 12 EXHAUST GRILLE (4 IN)	
62	1	HOFFMAN	TFP41UL12	NEMA 12 COOLING FAN and GRILLE (4 IN)	
63	1	HOFFMAN	TEMND	TEMPERATURE SWITCH	
64					

NOTE:

1. FOR BACKPANEL & SIDE PANEL LAYOUT SEE DRAWING 8767-WELL1-LY-002
2. FOR BILL OF MATERIAL SEE DWG 8767-WELL1-BOM-003
3. FOR NAMEPLATES SEE DWG 8767-WELL1-NP-004

NOTE: EXISTING WELL 1 PLC AND COMM. PANEL LAYOUT AND BILL OF MATERIAL ARE SHOWN FOR INFORMATION PURPOSES ONLY. CONTRACTOR SHALL MATCH NEW WELL PLC AND COMM. PANEL WITH EXISTING AND ADJUST AS NEEDED WITHOUT ADDITIONAL COST TO THE OWNER. ENTIRE SET OF WELL PLC AND COMM. PANEL DRAWINGS ARE AVAILABLE FROM OWNER IF NEEDED.

TETRA TECH
www.tetratech.com
201 EAST PINE STREET, SUITE 1000
ORLANDO, FL 32801
PHONE: 407-839-3955 FAX: 407-839-3790

HILLERS ELECTRICAL ENGINEERING, INC.
23257 STATE ROAD 7, SUITE 100
BOCA RATON, FLORIDA 33428
(561) 451-8165
(561) 451-8166 FAX
LICENSE NO: EB 0006877

BID SET

MARK	DATE	DESCRIPTION	BY

Client: ORANGE COUNTY UTILITIES
Proj. Loc.: ORANGE COUNTY, FL

WESTERN REGIONAL WATER SUPPLY FACILITY
IMPROVEMENTS PHASE 3B

EXISTING WELL 4 AND 7 P&ID DIAGRAM

Project No.:	200-10034-12003
Designed By:	TW
Drawn By:	TN
Checked By:	PFH

I003

Copyright: Tetra Tech

Thursday, August 23, 2018 5:58:05 PM DRAWING: E:\PROJECTS\TTT01D Western\PHASE-3B\DWG\SheetFiles\ELECT\T01D3B-I003.DWG LAYOUT: LAYOUT USER NAME: WIN, THEIN

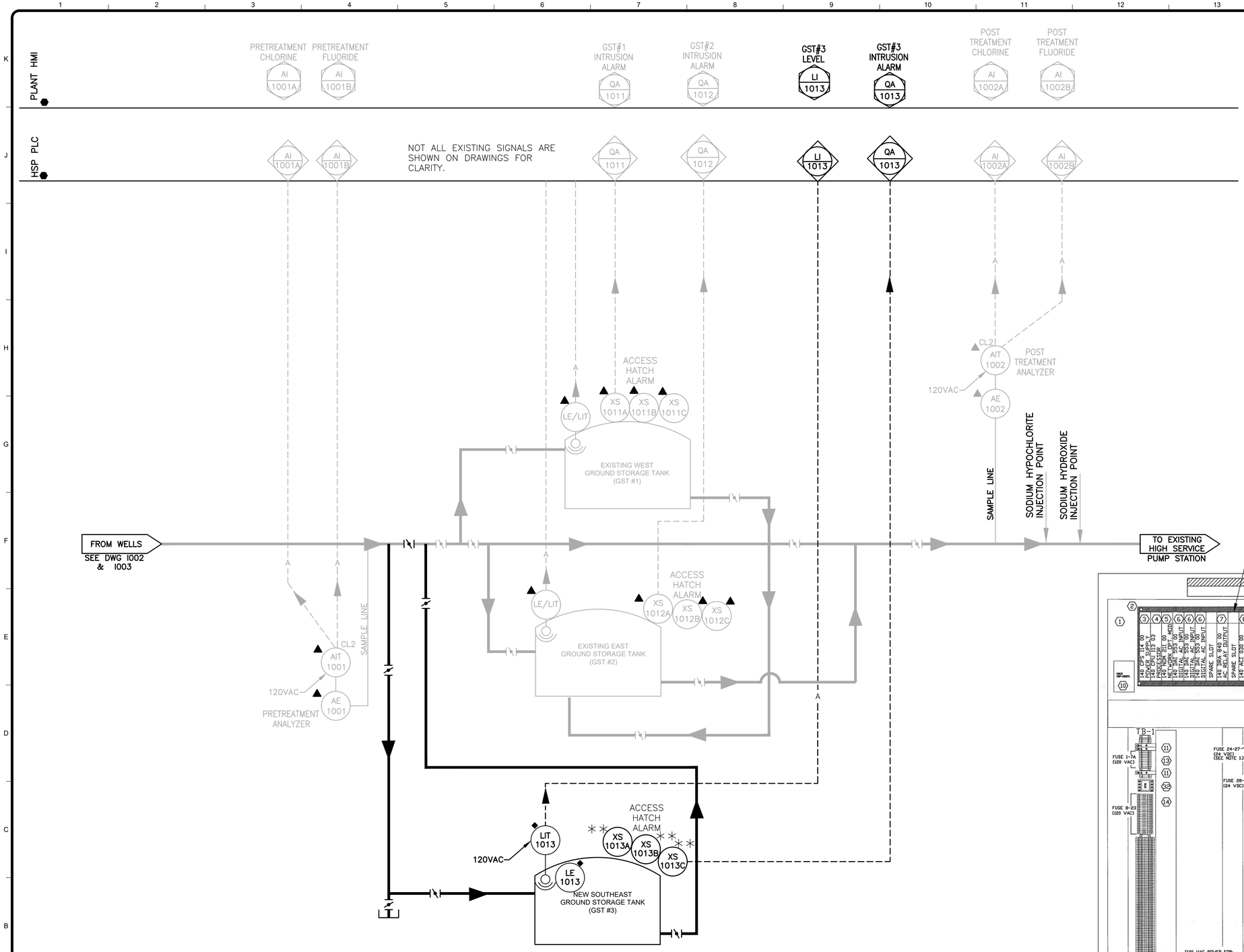

PROVIDE AND INSTALL NEW ANALOG INPUT CARD (MATCH EXISTING WITH MODEL AND POINTS) AT THE SPARE SLOT LOCATION. INSTALL SURGE SUPPRESSORS FOR NEW SIGNALS. MAKE ALL NECESSARY MODIFICATIONS, TERMINATIONS, ETC. FOR A COMPLETE AND WORKING PLC SYSTEM IN PLACE.

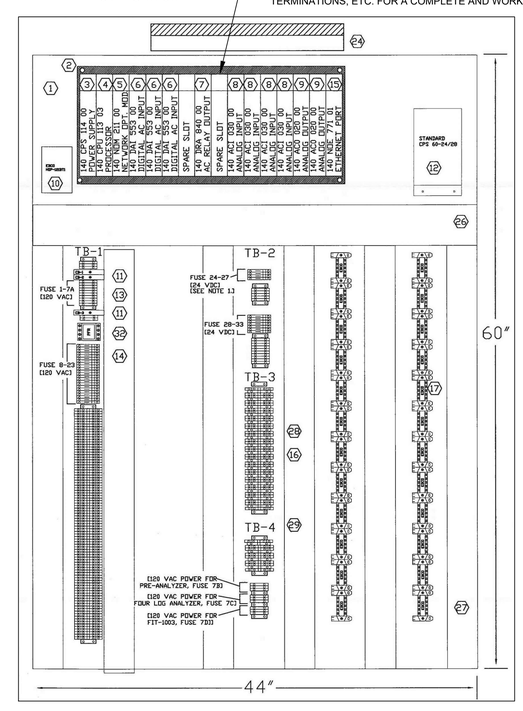

EXISTING HSP PLC PANEL FRONT VIEW
NOT TO SCALE

TETRA TECH
www.tetratech.com
201 EAST PINE STREET, SUITE 1000
ORLANDO, FL 32801
PHONE: 407-839-3955 FAX: 407-839-3790

HILLERS ELECTRICAL ENGINEERING, INC.
23257 STATE ROAD 7, SUITE 100
BOCA RATON, FLORIDA 33428
(561) 451-9165
(561) 451-9885 FAX
LICENSE NO: EB 0006977

BID SET

MARK	DATE	DESCRIPTION	BY

Client: ORANGE COUNTY UTILITIES
Proj. Loc.: ORANGE COUNTY, FL

WESTERN REGIONAL WATER SUPPLY FACILITY
IMPROVEMENTS PHASE 3B

P&ID - GROUND STORAGE TANKS

Project No.:	200-10034-12003
Designed By:	TW
Drawn By:	TN
Checked By:	PFH

I004

Copyright: Tetra Tech

Thursday, August 23, 2018 5:58:10 PM DRAWING: E:\PROJECTS\TTI\T01D Western\PHASE-3B\DWGS\sheetFiles\ELEC\TT01D3B-I004.DWG LAYOUT: I-4 USER NAME: WIN, THEIN

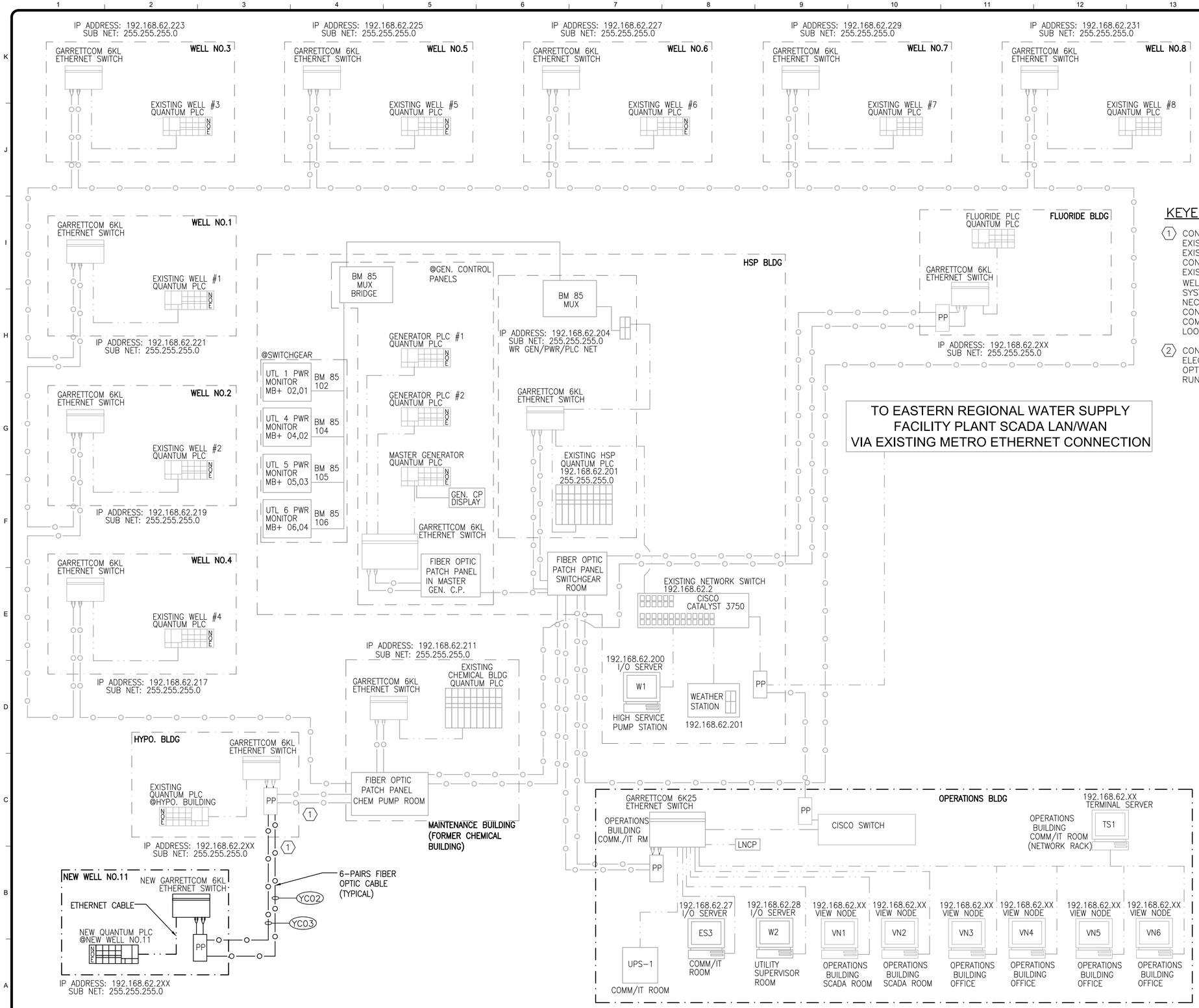

2 FIBER OPTIC COMMUNICATION RISER

NOT TO SCALE

LEGEND:

- PP – PATCH PANEL
- EXISTING
- NEW
- FIBER OPTIC CABLE (BY I&C SUPPLIER)
- LNCP – LIGHTING NETWORKED CONTROL PANEL

KEYED NOTES:

1. CONTRACTOR SHALL FIELD VERIFY THE EXISTING FIBER OPTIC LOOP CONNECTION AT EXISTING HYPOCHLORITE BUILDING AND CONNECT ACCORDINGLY. INTERCEPT THE EXISTING FIBER OPTIC LOOP TO INCLUDE NEW WELLS (NO.11) IN THE COMMUNICATION LOOP SYSTEM. PROVIDE FIBER OPTIC JUMPER AS NECESSARY AND MAKE ALL NECESSARY CONNECTIONS, TERMINATIONS FOR A COMPLETE AND FUNCTIONAL FIBER OPTIC LOOP SYSTEM IN PLACE.
2. CONTRACTOR SHALL COORDINATE WITH ELECTRICAL CONTRACTOR FOR THE FIBER OPTIC LENGTH REQUIREMENT FOR EACH FIBER RUN AND PROVIDE ACCORDINGLY.

TETRA TECH
www.tetratech.com
201 EAST PINE STREET, SUITE 1000
ORLANDO, FL 32801
PHONE: 407-839-3955 FAX: 407-839-3790

HILLERS ELECTRICAL ENGINEERING, INC.
23257 STATE ROAD 7, SUITE 100
BOCA RATON, FLORIDA 33428
(561) 451-9165
(561) 451-9166 FAX
LICENSE NO: EB 0006977

BID SET

MARK	DATE	DESCRIPTION	BY

Client: ORANGE COUNTY UTILITIES
Proj. Loc.: ORANGE COUNTY, FL

WESTERN REGIONAL WATER SUPPLY FACILITY IMPROVEMENTS PHASE 3B

MODIFIED COMMUNICATION BLOCK DIAGRAM

Project No.:	200-10034-12003
Designed By:	TW
Drawn By:	TN
Checked By:	PFH

I005

Copyright: Tetra Tech

Thursday, August 23, 2018 5:58:15 PM DRAWING: E:\PROJECTS\TT\TT01D WesternPHASE-3B\DWG\SheetFiles\ELEC\TT01D3B-I005.DWG LAYOUT: I-5 USER NAME: WIN, THEIN

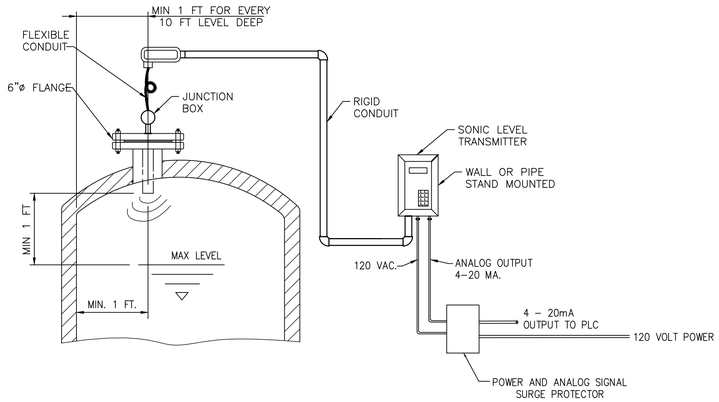

TANK SONIC LEVEL TRANSMITTER

NOT TO SCALE

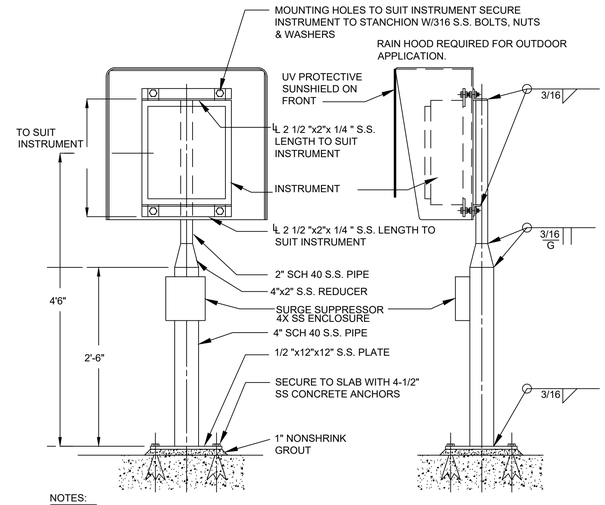

NOTES:

1. ROUND OFF ALL EXPOSED EDGES AND CORNERS. ALL S.S. SHALL BE 316 STAINLESS STEEL.

PIPE STAND TRANSMITTER MOUNT

NOT TO SCALE

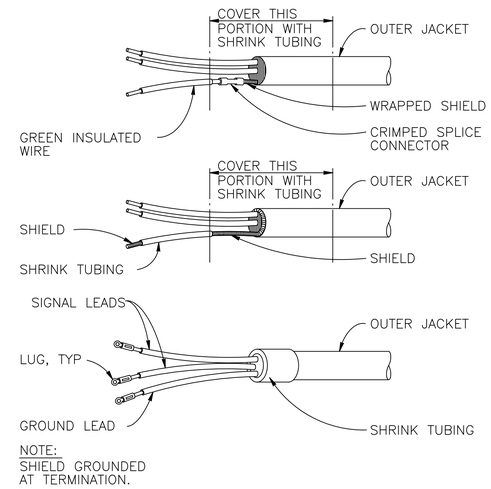

NOTE:
SHIELD GROUNDED AT TERMINATION.

TERMINATION OF SHIELDED CONTROL CABLE

NOT TO SCALE

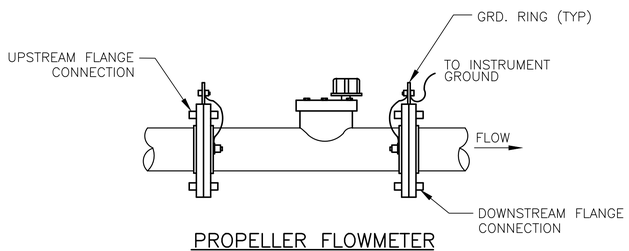

PROPELLER FLOWMETER INSTALLATION DETAIL

NOT TO SCALE

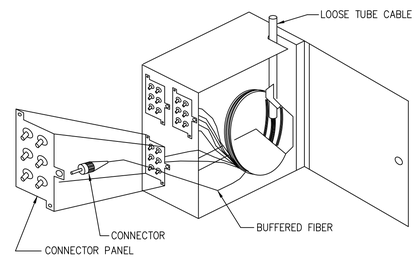

FIBER–OPTIC PATCH PANEL

NOT TO SCALE

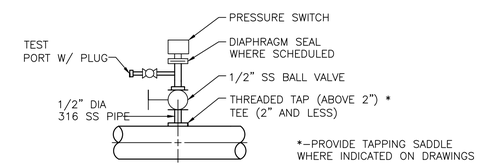

PRESSURE SWITCH MOUNTING DETAIL

NOT TO SCALE

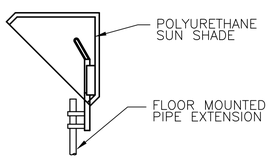

NOTE:
SUN SHIELD MUST BE FURNISHED AND INSTALLED TO ALL THE FIELD INSTRUMENT MOUNTED OUTDOOR SEE SCHEDULE.
ADAPT SUNSHIELD FOR WALL OR PIPE RACK MOUNTING.

FIELD INSTRUMENT SUN SHIELD

NOT TO SCALE

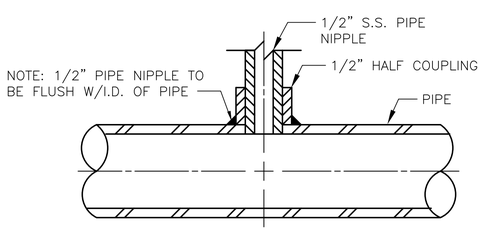

PRESSURE TAP DETAIL

NOT TO SCALE

NOTE: PRESSURE TAP SHALL BE FROM THE SIDE OF THE PIPE WHERE POSSIBLE.

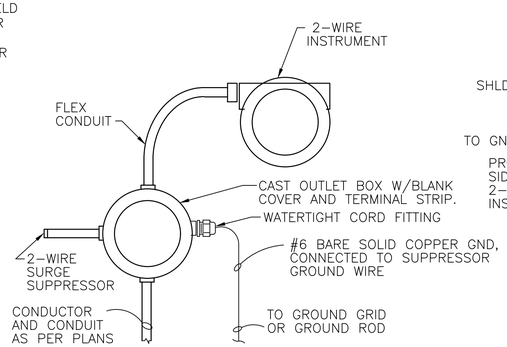

TYPE "A" SURGE SUPPRESSOR INSTALLATION 2–WIRE INSTRUMENT

NOT TO SCALE

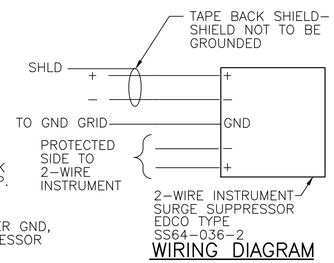

WIRING DIAGRAM

TETRA TECH
www.tetratech.com
201 EAST PINE STREET, SUITE 1000
ORLANDO, FL 32801
PHONE: 407-839-3955 FAX: 407-839-3790

HILLERS ELECTRICAL ENGINEERING, INC.
23257 STATE ROAD 7, SUITE 100
BOCA RATON, FLORIDA 33428
(561) 451-9165
(561) 451-9166 FAX
LICENSE NO: EB 0006977

BID SET

MARK	DATE	DESCRIPTION	BY

Client: ORANGE COUNTY UTILITIES
Proj. Loc.: ORANGE COUNTY, FL

WESTERN REGIONAL WATER SUPPLY FACILITY
IMPROVEMENTS PHASE 3B

INSTRUMENTATION DETAILS - SHEET 1

Project No.:	200-10034-12003
Designed By:	TW
Drawn By:	TN
Checked By:	PFH

I501

Copyright: Tetra Tech

Thursday, August 23, 2018 5:58:20 PM DRAWING: E:\PROJECTS\TTT101D Western\PHASE-3B\DWG\SheetFiles\ELEC\TT01D3B-I501.DWG LAYOUT: I-501 USER NAME: WIN, THEIN