ORANGE COUNTY
JOHN BRIDGES COMMUNITY CENTER
BUILDINGS D & F HVAC REPLACEMENT

ORANGE COUNTY MAYOR

TERESA JACOBS

DISTRICT 1 COMMISSIONER

S. SCOTT BOYD

DISTRICT 2 COMMISSIONER

BRYAN NELSON

DISTRICT 3 COMMISSIONER

PETE CLARKE

DISTRICT 4 COMMISSIONER

JENNIFER THOMPSON

DISTRICT 5 COMMISSIONER

TED B. EDWARDS

DISTRICT 6 COMMISSIONER

VICTORIA P. SIPLIN

BID DOCUMENTS

OCTOBER 25, 2015

ATKINS

482 SOUTH KELLER ROAD
ORLANDO, FLORIDA 32810

SHEET NUMBER	SHEET NAME	SCALE	SHEET ISSUED
M-000	COVER SHEET AND SHEET INDEX	No Scale	Yes
M-001	HVAC SYMBOLS LEGEND AND GENERAL NOTES	No Scale	Yes
M-002	CHILLED WATER PIPING SITE PLAN	3/32"=1'-0"	Yes
MD-101	BLDG D HVAC DEMO PLAN	1/4"=1'-0"	Yes
MD-102	BLDG F HVAC DEMO PLAN	1/4"=1'-0"	Yes
M-101	BLDG D HVAC NEW WORK PLAN	1/4"=1'-0"	Yes
M-102	BLDG F HVAC NEW WORK PLAN	1/4"=1'-0"	Yes
M-201	HVAC SECTIONS	1/4"=1'-0"	Yes
M-301	HVAC CONTROLS	No Scale	Yes
M-401	HVAC DETAILS	No Scale	Yes
M-402	HVAC DETAILS	No Scale	No
M-501	HVAC SCHEDULES	No Scale	Yes
E-000	ELECTRICAL SYMBOLS LEGEND AND GENERAL NOTES	No Scale	Yes
E-002	EXISTING ELECTRICAL SITE PLAN	3/32"=1'-0"	Yes
ED-101	BLDG D ELECTRICAL DEMO PLAN	1/4"=1'-0"	Yes
ED-102	BLDG F ELECTRICAL DEMO PLAN	1/4"=1'-0"	Yes
E-101	BLDG D ELECTRICAL NEW PLAN	1/4"=1'-0"	Yes
E-102	BLDG F ELECTRICAL NEW PLAN	1/4"=1'-0"	No
E-501	ELECTRICAL SCHEDULES	No Scale	Yes

ATKINS

482 SOUTH KELLER ROAD
ORLANDO, FL 32810
PHONE: 407.647.7275 FAX: 407.740.8958

CONSULTANT:

CLIENT:

PROJECT NAME:

Orange County John Bridges Community Center
Buildings D & F HVAC Replacement
445 W 13th Street Apopka, Fl 32703
100045176

No.	Date	Description

ISSUE LOG

PROFESSIONAL SEALS:

SHEET TITLE:

COVER SHEET AND SHEET INDEX

SHEET INFORMATION:

JOB No. 100045178 | Date Issued: OCTOBER 25, 2015

Designed By: RJB
Checked By: DLH
QC Review: TJF
Phase:

Sheet Number: M-000

HVAC SYMBOL LEGEND

SYMBOL	DESCRIPTION
	-CEILING DIFFUSER, ROUND OR RECTANGULAR NECK (CEILING DIFFUSERS ARE 4-WAY THROW UNO)
	-ROUND DIFFUSER
	-CEILING RETURN
	-CEILING EXHAUST
	-CEILING DIFFUSER, RECTANGULAR (CEILING DIFFUSERS ARE 4-WAY THROW UNO)
	-SUPPLY REGISTER OR GRILLE (VERTICAL MOUNT, SIDEWALL)
	-RETURN/EXHAUST REGISTER OR GRILLE (VERTICAL MOUNT, SIDEWALL)
1	-REVISION REFERENCE
1 M-1	-DETAIL REFERENCE: TOP-DETAIL#, BOTTOM-DRAWING# SHOWN ON
T	-THERMOSTAT/TEMPERATURE SENSOR
H	-HUMIDISTAT/HUMIDITY SENSOR
	-DUCT SMOKE DETECTOR
	-CONNECT TO EXISTING
	-DEMOLISH TO POINT INDICATED
M	-MOTORIZED CONTROL DAMPER
TS	-TEMPERATURE SENSOR
P	-PRESSURE SENSOR
BD	-BACKDRAFT DAMPER
	-NEUTRAL RELATIVE PRESSURE
	-POSITIVE RELATIVE PRESSURE
	-NEGATIVE RELATIVE PRESSURE
1	-SHEET NOTE CALLOUT
1	-SHEET NOTE CALLOUT
1	-SHEET NOTE CALLOUT
	-CEILING MOUNTED ACCESS DOOR

SYMBOL	DESCRIPTION
	-FIRE DAMPER (WITH ACCESS PANEL)
	-FIRE & SMOKE DAMPER (WITH ACCESS PANEL)
	-EXISTING FIRE DAMPER TO REMAIN
	-EXISTING FIRE & SMOKE DAMPER TO REMAIN
SA-#	-SOUND ATTENUATOR
M	-MOTOR OPERATED CONTROL DAMPER (MOD)
FM	-AIR FLOW MEASURING STATION
	-MANUAL BALANCING DAMPER
	-DOOR GRILLE
UC	-UNDERCUT DOOR
	-ACCESS DOORS, VERTICAL OR HORIZONTAL
	-STAINLESS STEEL DUCTWORK
	-FLEXIBLE CONNECTION
12x8	-FLAT OVAL DUCT
24x12	-NEW DUCTWORK, FIRST DIMENSION IS SIDE SHOWN
24x12	-EXISTING DUCTWORK TO REMAIN
24x12	-EXISTING DUCTWORK TO BE REMOVED
24x12 DOWN UP W/IN FLOOR	-DUCT ELBOW, POSITIVE PRESSURE (SUPPLY), FIRST DIMENSION INDICATES SIDE TO WHICH ARROW IS POINTING
	-DUCT ELBOW, EXHAUST
	-DUCT ELBOW, NEGATIVE PRESSURE, RETURN
	-DUCT ELBOW UP THROUGH ROOF OR SLAB ABOVE
	-RECTANGULAR DUCT SECTION UP, POSITIVE PRESSURE, SUPPLY OR OUTSIDE AIR
	-RECTANGULAR DUCT SECTION UP, NEGATIVE PRESSURE, RETURN
	-RECTANGULAR DUCT SECTION UP, EXHAUST
	-ROUND DUCT SECTION UP
	-FLAT OVAL DUCT SECTION UP
	-EXHAUST DUCT UP THROUGH SLAB W/FAN ON ROOF ABOVE
	-EXHAUST FAN ON ROOF W/DUCT DOWN THROUGH ROOF
	-OUTSIDE AIR DUCT UP THROUGH SLAB W/FAN ON ROOF ABOVE
	-OUTSIDE AIR FAN ON ROOF W/DUCT DOWN THROUGH ROOF

SYMBOL	DESCRIPTION
	-TERMINAL UNIT, VARIABLE/CONSTANT AIR VOLUME
	-TERMINAL UNIT, VARIABLE/CONSTANT AIR VOLUME WITH ELECTRIC HEAT
	-TERMINAL UNIT, VARIABLE/CONSTANT AIR VOLUME, FAN POWERED
	-TERMINAL UNIT, VARIABLE/CONSTANT AIR VOLUME, FAN POWERED, WITH ELECTRIC HEAT
	-ELECTRIC DUCT HEATER (W/ PANEL CLEARANCE)
	-HYDRONIC REHEAT COIL
	-INLINE CENTRIFUGAL FAN
UP	-CHANGE OF ELEVATION
	-FLEXIBLE DUCT
	-TRANSITION, CONCENTRIC
	-TRANSITION, ECCENTRIC
10x8 8#	-TRANSITION, SQUARE TO ROUND
	-SQUARE THROAT ELBOW W/TURNING VANES
	-RADIUS ELBOW
	-RECTANGULAR/ROUND BRANCH TAKE-OFF OR ROUND/ROUND BRANCH TAKE-OFF
	-SQUARE THROAT TEE
12x8	-RADIUS TEE
	-RECTANGLE-TO-ROUND TAKE-OFF
	-STANDARD BRANCH TAKE-OFF
	-SPIN-IN TAKE-OFF W/VOLUME DAMPER & FLEXIBLE DUCT (VOLUME DAMPER NOT SHOWN)
	-SPIN-IN TAKE-OFF W/VOLUME DAMPER & ROUND DUCT (VOLUME DAMPER NOT SHOWN)

HVAC ABBREVIATIONS

SYMBOL	DESCRIPTION	SYMBOL	DESCRIPTION
AFD	-ADJUSTABLE FREQUENCY DRIVE	LD	-LINEAR DIFFUSER
AFF	-ABOVE FINISHED FLOOR	MBH	-THOUSAND BTUs PER HOUR
AFR	-ABOVE FINISHED ROOF	MCA	-MINIMUM CIRCUIT AMPS
AHU	-AIR HANDLING UNIT	MOCP	-MAXIMUM OVER CURRENT PROTECTION
AP	-ACCESS PANEL	MOD	-MOTOR OPERATED CONTROL DAMPER (MOD)
BOP	-BOTTOM OF PIPE	NC	-NORMALLY CLOSED
BHP	-BRAKE HORSEPOWER	NO	-NORMALLY OPEN
BTU	-BRITISH THERMAL UNIT	NTS	-NOT TO SCALE
h	-CENTER LINE	OA	-OUTSIDE AIR
∮	-CFM (CUBIC FEET PER MINUTE)	OAL	-OUTSIDE AIR LOUVER
CD	-CEILING DIFFUSER	PRV	-PRESSURE REDUCING VALVE
CT	-COOLING TOWER	PRS	-PRESSURE REDUCING STATION
CV	-CONSTANT AIR VOLUME	PSI	-POUNDS PER SQUARE INCH
ΔP	-CHANGE IN PRESSURE	PSIG	-PSI GAUGE
ΔT	-CHANGE IN TEMPERATURE	PTAC	-PACKAGED TERMINAL AIR CONDITIONER
CFM	-CUBIC FEET PER MINUTE	PVC	-POLYVINYL CHLORIDE PIPE
CU	-CONDENSING UNIT	RA	-RETURN AIR
DDC	-DIRECT DIGITAL CONTROLS	RHC	-REHEAT COIL
DN	-DOWN	RHP	-ROOFTOP HEAT PUMP
EAT	-ENTERING AIR TEMPERATURE	RPM	-REVOLUTIONS PER MINUTE
ESP	-EXTERNAL STATIC PRESSURE	RS/L	-REFRIGERANT SUCTION & LIQUID LINES
EWT	-ENTERING WATER TEMPERATURE	RTU	-ROOFTOP AIR HANDLING UNIT
FCU	-FAN COIL UNIT	SA	-SUPPLY AIR
FD	-FIRE DAMPER	SP	-STATIC PRESSURE
FF	-FINAL FILTERS	TSP	-TOTAL STATIC PRESSURE
FLA	-FULL LOAD AMPS	UNO	-UNLESS NOTED OTHERWISE
FPM	-FEET PER MINUTE	V/PH	-VOLTS/PHASE
GPM	-GALLONS PER MINUTE	VAV	-VARIABLE AIR VOLUME
KW	-KILOWATT	VFD	-VARIABLE FREQUENCY DRIVE
LAT	-LEAVING AIR TEMPERATURE		
LWT	-LEAVING WATER TEMPERATURE		

HVAC GENERAL NOTES

1. CONNECTION TO EQUIPMENT SHALL BE VERIFIED WITH MANUFACTURER'S CERTIFIED DRAWINGS. TRANSITIONS TO ALL EQUIPMENT SHALL BE VERIFIED AND PROVIDED FOR EQUIPMENT FURNISHED.
2. DIMENSIONS SHALL BE FIELD-VERIFIED AND COORDINATED PRIOR TO PROCUREMENT OR FABRICATION. COORDINATE THE WORK WITH OTHER TRADES INVOLVED. FIELD MODIFICATIONS SUCH AS OFFSETS IN PIPING OR DUCTWORK (INCLUDING DIVIDED DUCTWORK) NEEDED DUE TO OBSTRUCTIONS OR INTERFERENCES SHALL BE PROVIDED AT NO ADDITIONAL COST. FOR PROJECTS INVOLVING RENOVATION, COORDINATE NEW WORK WITH EXISTING ELEMENTS SUCH AS THE BUILDING STRUCTURE AND ARCHITECTURAL FEATURES, SPRINKLER PIPING, LIGHTS, PLUMBING, AND ELECTRICAL CONDUIT.
3. DUCT CONSTRUCTION SHALL BE IN ACCORDANCE WITH THE LATEST EDITION OF THE SMACNA HVAC DUCT CONSTRUCTION STANDARD.
4. SEE SPECIFICATIONS FOR GAUGES, THICKNESS, BRACING, REQUIREMENTS, ETC., OF DUCTWORK.
5. PROVIDE AIR TURNING VANES IN ALL MITERED 90 DEGREE RECTANGULAR DUCT ELBOWS.
6. DUCT SIZES AND ALL OPENINGS THROUGH BUILDING CONSTRUCTION SHALL SUIT EQUIPMENT FURNISHED.
7. COORDINATE DIFFUSER, GRILLE AND REGISTER LOCATIONS WITH ARCHITECTURAL REFLECTED CEILING PLANS AND EQUIPMENT OF ALL TRADES.
8. LOCATE THERMOSTATS, TEMPERATURE SENSORS, HUMIDISTATS, AND HUMIDITY SENSORS AT 48" ABOVE FINISHED FLOOR UNLESS NOTED OTHERWISE. COORDINATE LOCATIONS WITH OTHER EQUIPMENT, FURNITURE, AND DOOR SWINGS.
9. ALL EQUIPMENT, DUCTWORK, ETC., SHALL BE SUPPORTED AS DETAILED AND/OR SPECIFIED. PROVIDE ADDITIONAL SUPPORTS AS REQUIRED TO PROVIDE A VIBRATION-FREE, RIGID INSTALLATION.
10. ALL DUCT SIZES SHOWN ARE INSIDE CLEAR DIMENSIONS.
11. DAMPERS AND INSIDES OF DUCTS VISIBLE THROUGH GRILLES, REGISTERS AND DIFFUSERS SHALL BE PAINTED FLAT BLACK.
12. REFER TO TYPICAL DETAILS FOR PIPING AND INSTALLATION OF EQUIPMENT.
13. TRAPPED CONDENSATE DRAINS FROM ALL MECHANICAL EQUIPMENT SHALL BE PROVIDED FOR PROPER DRAINAGE TO SUIT EQUIPMENT FURNISHED.
14. ACCESS PANELS IN DUCTWORK AND CEILINGS SHALL BE PROVIDED WHERE REQUIRED FOR OPERATION, BALANCING OR MAINTENANCE OF ALL MECHANICAL EQUIPMENT.
15. ALL DUCTWORK AND PIPING IS SHOWN SCHEMATICALLY. PROVIDE ALL TRANSITIONS, TURNING VANES, ELBOWS, FITTINGS, ETC., TO ALLOW SMOOTH FLOWS. ALL SPLIT DUCT FITTINGS SHALL TRANSITION TO FULL SIZE OF THE SUM OF BOTH BRANCHES, UPSTREAM OF SPLIT.
16. PROVIDE CONCRETE HOUSEKEEPING PAD UNDER ALL FLOOR-MOUNTED EQUIPMENT. REFER TO SPECIFICATIONS FOR DETAILED REQUIREMENTS.
17. VERIFY FINISH WITH ARCHITECT PRIOR TO PURCHASING GRILLES, REGISTERS, DIFFUSERS, LOUVERS AND OTHER AIR DISTRIBUTION DEVICES.
18. PROVIDE FLEXIBLE DUCT CONNECTIONS ON ALL DUCTWORK CONNECTING TO EACH FAN, AIR HANDLING UNITS, AND FAN COIL UNITS.
19. PROVIDE TRANSITIONS AT DIFFUSER NECKS AS REQUIRED TO MATCH SIZES OF FLEX DUCTS TO BE CONNECTED.
20. INTERRUPTIONS TO EXISTING SERVICES SHALL BE SCHEDULED FOR TIMES OTHER THAN NORMAL OPERATING HOURS (SUCH AS NIGHTS AND WEEKENDS). SUCH INTERRUPTIONS TO SERVICES SHALL NOT BE MADE WITHOUT THE PRIOR WRITTEN CONSENT OF THE OWNER'S REPRESENTATIVE AND PROPER COORDINATION WITH OTHER TRADES. PRE-WORK SHALL BE PERFORMED TO MAKE THE SHUTDOWN PERIOD AS BRIEF AS POSSIBLE.
21. ALL EQUIPMENT, DUCTWORK, ETC., TO BE REMOVED SHALL REMAIN PROPERTY OF THE OWNER OR DISPOSED OF LEGALLY, AS DIRECTED BY OWNER.
22. MAINTAIN CLEARANCE OF A MINIMUM OF 6" BETWEEN DUCTWORK, PIPING, EQUIPMENT, ETC., AND ALL FIRE RATED AND FIRE/SMOKE RATED PARTITIONS, TO ALLOW FOR INSPECTIONS OF RATED WALLS.
23. LOCATE ALL OUTSIDE AIR INTAKES A MINIMUM OF 10'-0" CLEAR FROM ALL PLUMBING VENTS AND EXHAUST AIR DISCHARGE LOCATIONS. LOWEST POINT OF EACH OUTSIDE AIR INTAKE ON ROOF SHALL BE A MINIMUM OF 24" ABOVE ROOF.
24. DUCT RUNOUTS TO DIFFUSERS SHALL MATCH THE SIZE OF THE DIFFUSER NECK.
25. WATER PRESSURE DROPS THROUGH COIL CONTROL VALVES SHALL NOT EXCEED 5 FT.
26. UNLESS OTHERWISE NOTED, ALL EQUIPMENT AND VALVE DRAINS SHALL BE INDEPENDENTLY PIPED FULL SIZE TO THE NEAREST PLUMBING DRAIN.
27. SLEEVE AND SEAL ALL PIPING PENETRATIONS THROUGH BUILDING PARTITIONS. PROVIDE MANUAL AIR VENTS AT ALL HIGH POINTS IN CHILLED WATER AND DRAINS AT ALL LOW POINTS.
28. THE SCOPE OF THE DESIGN WORK UNDER THIS CONTRACT CONSISTS OF THE REPLACEMENT AND/OR ADDITION OF NEW HVAC EQUIPMENT. SPACE OCCUPANCY TYPE AND SIZE WILL REMAIN THE SAME. AS A RESULT, VENTILATION AIR FOR IAQ WILL REMAIN UN-CHANGED AND ASHRAE 62.1 CALCULATIONS ARE NOT REQUIRED.
29. PLUMBING INSTALLATION SHALL COMPLY WITH THE 2014 FLORIDA PLUMBING CODE. CONDENSATE DRAIN PIPING SHALL BE SLOPPED NOT LESS THAN 1/8" PER FOOT. DRAINAGE FITTINGS SHALL BE USED IN SIZES 1-1/4" AND LARGER. BRANCHES FROM INDIVIDUAL UNITS SHALL BE NO SMALLER THAN THE DRAIN CONNECTION ON THE UNIT. PROVIDE AIR GAP AS REQUIRED BY CODE. INSULATE CONDENSATE DRAIN PIPES WITH 1/2" INSULATION IN THEIR ENTIRETY. (REFER TO SPECIFICATIONS)
30. CONTRACTOR SHALL PROVIDE TEMPORARY COOLING AND HEATING TO THE BUILDING OCCUPANTS. SPACE TEMPERATURES SHALL BE MAINTAINED BETWEEN 68°F AND 72°F FOR HEATING AND BETWEEN 72°F AND 78°F FOR COOLING DURING CONSTRUCTION.

HVAC PIPING SYMBOL LEGEND

SYMBOL	DESCRIPTION
CWS	-CONDENSER WATER SUPPLY
CWR	-CONDENSER WATER RETURN
CHWS	-CHILLED WATER SUPPLY
CHWR	-CHILLED WATER RETURN
CD	-CONDENSATE
CR	-CONDENSATE RETURN
PC	-PUMPED CONDENSATE
HWR	-HOT WATER RETURN
HWS	-HOT WATER SUPPLY
HPS	-HIGH PRESSURE STEAM SUPPLY
MPS	-MEDIUM PRESSURE STEAM SUPPLY
LPS	-LOW PRESSURE STEAM SUPPLY
HPR	-HIGH PRESSURE STEAM RETURN
MPR	-MEDIUM PRESSURE STEAM RETURN
LPR	-LOW PRESSURE STEAM RETURN
RL	-REFRIGERANT LIQUID
RS	-REFRIGERANT SUCTION

SYMBOL	DESCRIPTION
	-FLOW DIRECTION
	-GATE VALVE
	-BALL VALVE
	-BUTTERFLY VALVE
	-CONTROL VALVE
	-CHECK VALVE
	-CALIBRATING BALANCING VALVE
	-GAS COCK
	-UNION
	-STRAINER
	-SOLENOID VALVE
	-PSI REG.
	-FLOW SWITCH
	-SLOPE DIRECTION (DOWN)
	-FLEX CONNECTION
	-O.S.&Y. GATE VALVE
	-STEAM TRAP
	-THREE-WAY CONTROL VALVE
	-THERMOMETER

SYMBOL	DESCRIPTION
EQUIP.	- P-TRAP
	-TWO-WAY CHECK VALVE
MV	-MANUAL VENT
	-PRESSURE GAUGE
	-RELIEF VALVE
FM	-FLOW METER
M	-WATER METER
	-INLINE PUMP
	-INLINE PUMP
	-VALVE ON RISER
	-CAP
	-CONNECTION, BOTTOM
	-CONNECTION, TOP
	-COUPLING
	-ELBOW, 90°
	-ELBOW, 45°
	-ELBOW, TURNED DOWN
	-ELBOW, TURNED UP
	-TEE, OUTLET DOWN
	-TEE, OUTLET UP
D D	-45° PIPE RISE (R) / DROP (D)
	-PIPE ANCHORS
	-CONCENTRIC REDUCER
	-ECCENTRIC REDUCER

NOTE: SOME SYMBOLS SHOWN ON THIS LEGEND MAY NOT PERTAIN TO THIS PROJECT

HVAC EQUIPMENT TAGS

TAG A 200 CFM	-AIR DISTRIBUTION DEVICE
AHU NUMBER AHU-1	-AIR HANDLING UNIT
AHU NUMBER HEATER NUMBER EDH-1-1	-ELECTRIC DUCT HEATER

DESIGN CONDITIONS

	DEG. F (DB)	DEG. F (WB)	% RH	NOTES
OUTDOOR SUMMER CONDITIONS	94.9	75.4		
OUTDOOR WINTER CONDITIONS	38.6			
INDOOR SUMMER CONDITIONS OCC.	75	62	50 (+/-5)	
INDOOR WINTER CONDITIONS OCC.	72		30 - 60	
INDOOR SUMMER CONDITIONS UNOCC.	85	70	50 (+/-5)	
INDOOR WINTER CONDITIONS UNOCC.	62		30 - 60	

ATKINS

482 SOUTH KELLER ROAD
ORLANDO, FL 32810
PHONE: 407.647.7275 FAX: 407.740.8958

CONSULTANT:

CLIENT:

PROJECT NAME:

Orange County John Bridges Community Center
Buildings D & F HVAC Replacement
445 W 13th Street Apopka, Fl 32703
100045176

No.	Date	Description

ISSUE LOG

PROFESSIONAL SEALS:

SHEET TITLE:

HVAC SYMBOLS LEGEND AND GENERAL NOTES

SHEET INFORMATION:

JOB No. 100045178		Date Issued:	OCTOBER 25, 2015
Designed By:	RJB	Sheet Number:	M-001
Checked By:	DLH		
QC Review:	TJF		
Phase:			

A CHILLED WATER PIPING SITE PLAN

SCALE: 3/32" = 1'-0"

N

ATKINS

482 SOUTH KELLER ROAD
ORLANDO, FL 32810
PHONE: 407.647.7275 FAX: 407.740.8958

CONSULTANT:

CLIENT:

PROJECT NAME:

Orange County John Bridges Community Center Buildings D & F HVAC Replacement

445 W 13th Street Apopka, Fl 32703

100045176

No.	Date	Description

ISSUE LOG

PROFESSIONAL SEALS:

SHEET TITLE:

CHILLED WATER PIPING SITE PLAN

SHEET INFORMATION:

JOB No.	100045178	Date Issued:	OCTOBER 25, 2015
Designed By:	RJB	Sheet Number:	M-002
Checked By:	DLH		
QC Review:	TJF		
Phase:			

DEMO NOTES

1. UNLESS NOTED OTHERWISE HEAVY LINE WEIGHT INDICATES EXISTING EQUIPMENT TO BE REMOVED/DEMOLISHED. LIGHT LINE WEIGHT INDICATES EXISTING TO REMAIN.
2. CONTRACTOR SHALL FIELD INSPECT EXISTING CONDITION OF ALL AFFECTED WORK, SHALL FIELD MEASURE MECHANICAL EQUIPMENT SPACE AND SHALL VERIFY EXISTING POWER REQUIREMENTS PRIOR TO ORDERING/PURCHASING OF FINAL PRODUCT.
3. REMOVE EXISTING DX EQUIPMENT AS NOTED ON PLAN. CONTRACTOR SHALL TURN OVER ALL REMOVED EQUIPMENT TO THE OWNER. REMOVE ASSOCIATED POWER FEED BACK TO SOURCE. REMOVE DISCONNECT SWITCH AND BREAKER. ASSOCIATED SA, RA AND OA DUCTS WITHIN THE MECHANICAL ROOMS SHALL BE RE-USED TO THE GREATEST EXTENT POSSIBLE PROVIDED THEY ARE STRUCTURALLY SOUND AND FREE OF CORROSION AND LEAKS.
4. ALL EXISTING DUCT-MOUNTED SMOKE DETECTORS SHALL REMAIN.

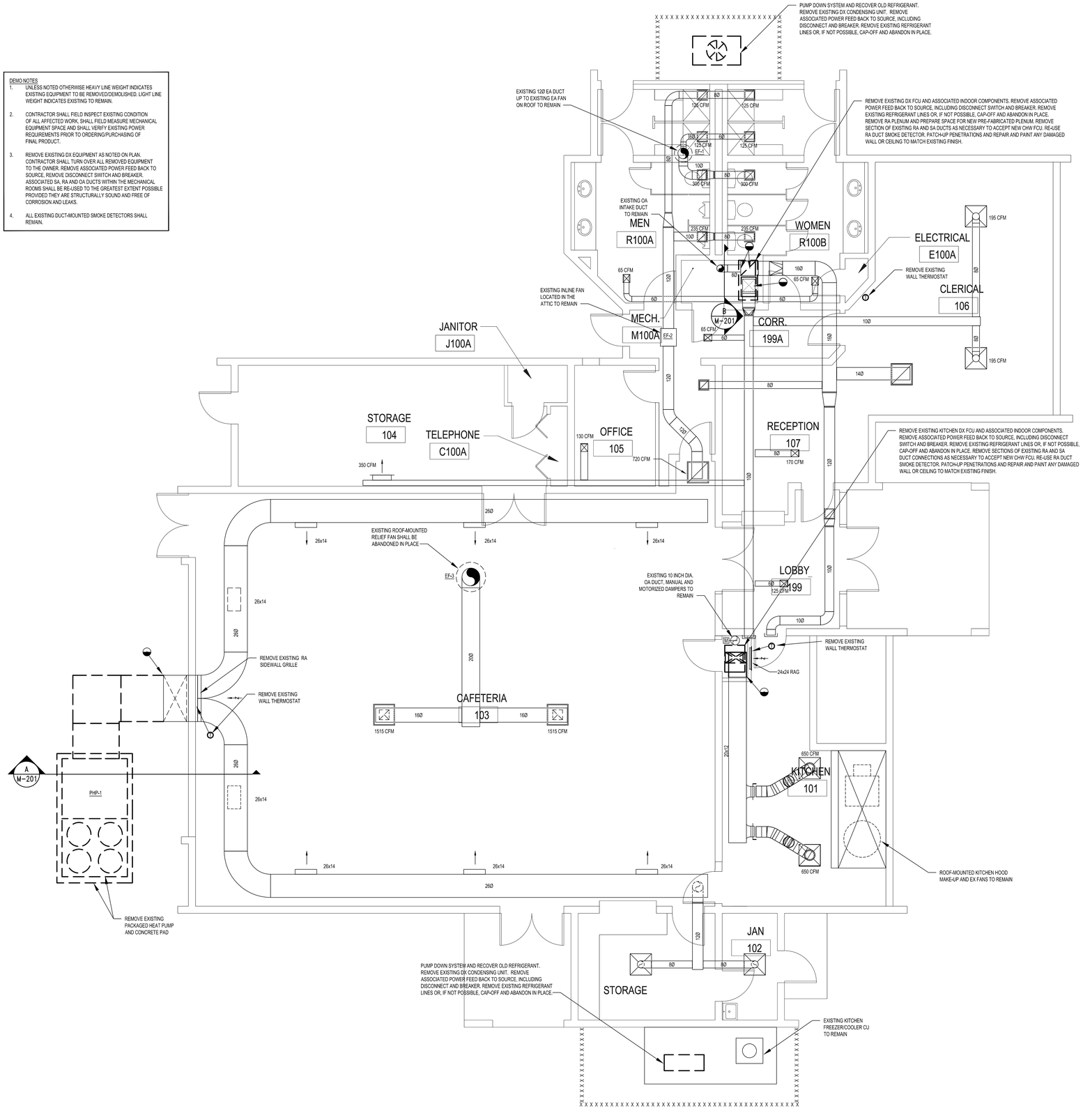

A BLDG D HVAC DEMO PLAN

SCALE: 1/4" = 1'-0"

N

ATKINS

482 SOUTH KELLER ROAD
ORLANDO, FL 32810
PHONE: 407.647.7275 FAX: 407.740.8958

CONSULTANT:

CLIENT:

PROJECT NAME:

Orange County John Bridges Community Center Buildings D & F HVAC Replacement

445 W 13th Street Apopka, Fl 32703

100045176

No.	Date	Description

ISSUE LOG

PROFESSIONAL SEALS:

SHEET TITLE:

BLDG D HVAC DEMO PLAN

SHEET INFORMATION:

JOB No. 100045178		Date Issued:	OCTOBER 25, 2015
Designed By:	RJB	Sheet Number:	MD-101
Checked By:	DLH		
QC Review:	TJF		
Phase:			

DEMO NOTES

1. UNLESS NOTED OTHERWISE HEAVY LINE WEIGHT INDICATES EXISTING EQUIPMENT TO BE REMOVED/DEMOLISHED. LIGHT LINE WEIGHT INDICATES EXISTING TO REMAIN.
2. CONTRACTOR SHALL FIELD INSPECT EXISTING CONDITION OF ALL AFFECTED WORK. SHALL FIELD MEASURE MECHANICAL EQUIPMENT SPACE AND SHALL VERIFY EXISTING POWER REQUIREMENTS PRIOR TO ORDERING/PURCHASING OF FINAL PRODUCT.
3. REMOVE EXISTING DX EQUIPMENT AS NOTED ON PLAN. CONTRACTOR SHALL TURN OVER ALL REMOVED EQUIPMENT TO THE OWNER. REMOVE ASSOCIATED POWER FEED BACK TO SOURCE, INCLUDING DISCONNECT SWITCH AND BREAKER. ASSOCIATED SA DUCTS WITHIN THE MECHANICAL ROOMS SHALL BE RE-USED TO THE GREATEST EXTENT POSSIBLE PROVIDED THEY ARE STRUCTURALLY SOUND AND FREE OF CORROSION AND LEAKS.
4. ALL EXISTING DUCT-MOUNTED SMOKE DETECTORS SHALL REMAIN.

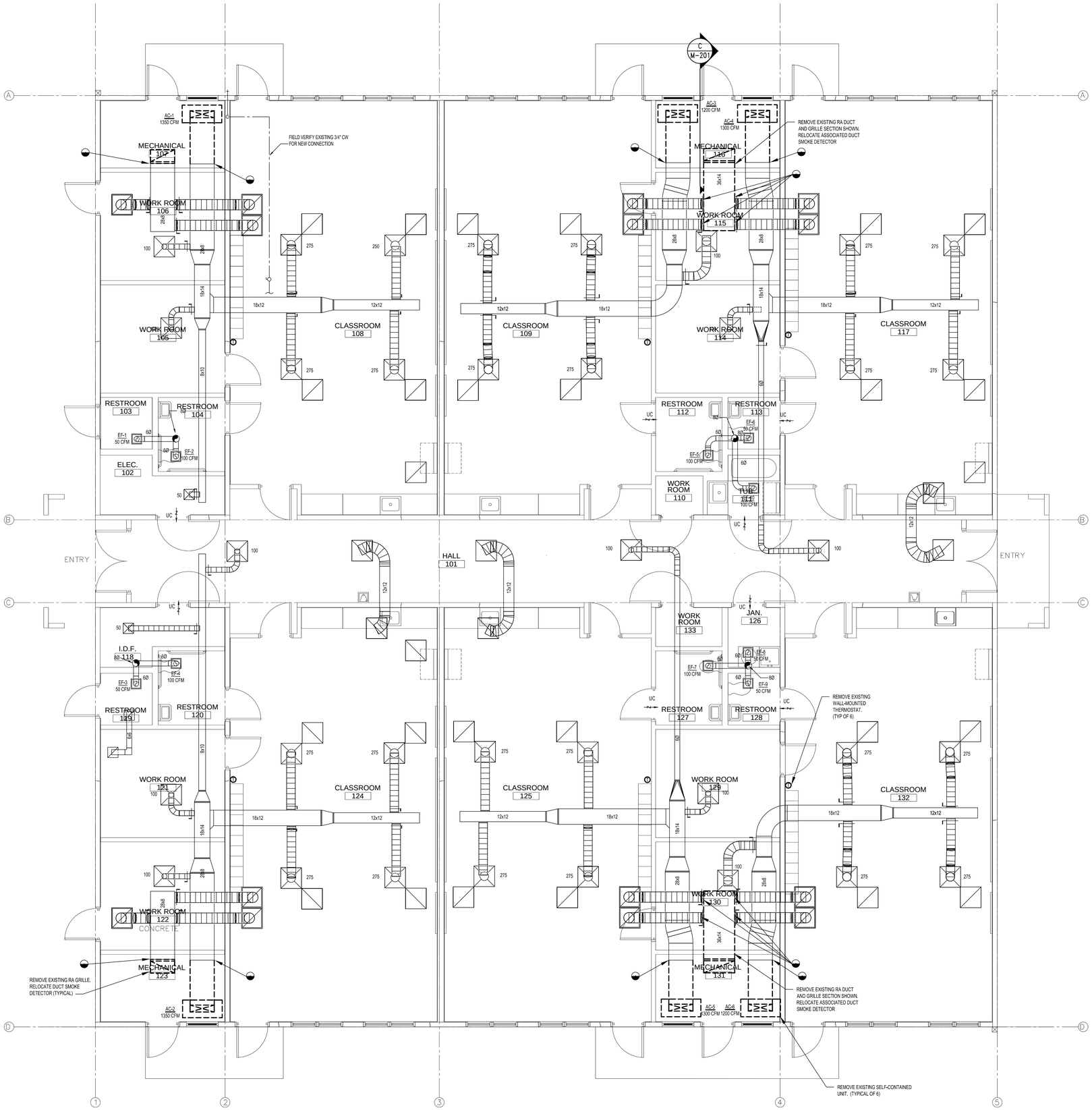

A **BLDG F HVAC DEMO PLAN**

SCALE: 1/4" = 1'-0"

N

ATKINS

482 SOUTH KELLER ROAD
ORLANDO, FL 32810
PHONE: 407.647.7275 FAX: 407.740.8958

CONSULTANT:

CLIENT:

PROJECT NAME:

Orange County John Bridges Community Center Buildings D & F HVAC Replacement

445 W 13th Street Apopka, Fl 32703

100045176

No.	Date	Description

ISSUE LOG

PROFESSIONAL SEALS:

SHEET TITLE:

BLDG F HVAC DEMO PLAN

SHEET INFORMATION:

JOB No. 100045178		Date Issued:	OCTOBER 25, 2015
Designed By:	RJB	Sheet Number:	MD-102
Checked By:	DLH		
QC Review:	TJF		
Phase:			

GENERAL NOTES

1. CONTRACTOR SHALL REPAIR, PATCH AND OR REPLACE DUCTS AND INSULATION TO PROVIDE A LEAK FREE AND THERMALLY PROTECTED AIR-DISTRIBUTION SYSTEM.
2. THE EXISTING AIR DISTRIBUTION SYSTEM SHALL BE PROFESSIONALLY CLEANED. THIS INCLUDES ALL DUCTWORK, REGISTERS AND GRILLES. (REFER TO SPECIFICATIONS)
3. TEST AND BALANCE NEW SYSTEMS PER SPECIFICATIONS. AIR HANDLING UNIT SHALL BE BALANCED TO NEW AIRFLOWS SHOWN ON PLANS.
4. CONNECT NEW UNITS TO EXISTING SA, RA AND OA DUCTS. EXISTING DUCT SMOKE DETECTORS TO REMAIN. PROVIDE NEW POWER FEED BACK TO SOURCE AND PROVIDE NEW DISCONNECT AND BREAKER. PROVIDE NEW CONDENSATE LINE AND NEW CHILLED WATER PIPING. BALANCE SYSTEM TO AIRFLOWS INDICATED ON PLANS.

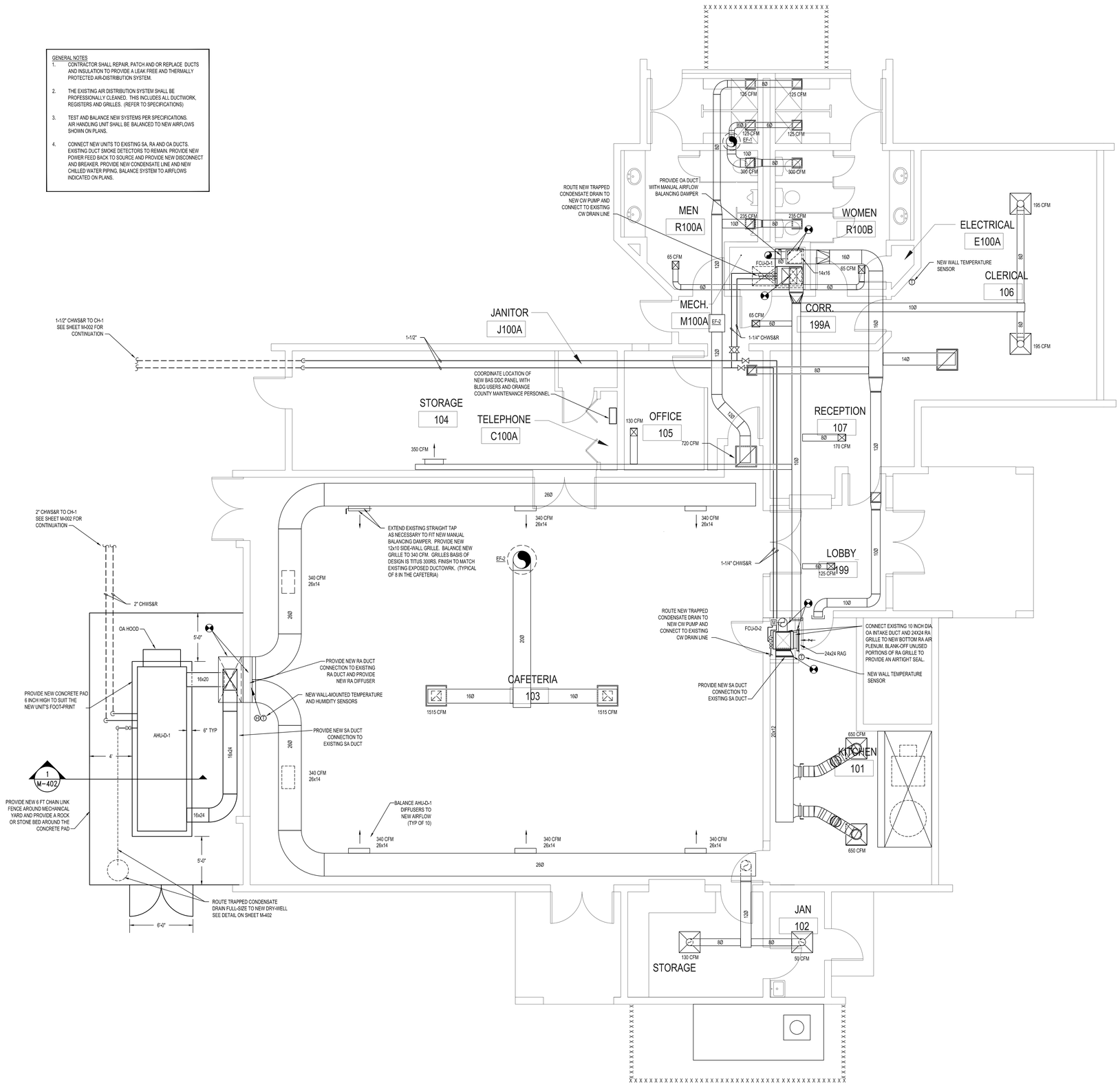

A BLDG D NEW WORK HVAC PLAN

SCALE: 1/4" = 1'-0"

ATKINS

482 SOUTH KELLER ROAD
ORLANDO, FL 32810
PHONE: 407.647.7275 FAX: 407.740.8958

CONSULTANT:

CLIENT:

PROJECT NAME:

Orange County John Bridges Community Center Buildings D & F HVAC Replacement

445 W 13th Street Apopka, Fl 32703

100045176

No.	Date	Description

ISSUE LOG

PROFESSIONAL SEALS:

SHEET TITLE:

BLDG D NEW WORK HVAC PLAN

SHEET INFORMATION:

JOB No. 100045178		Date Issued:	OCTOBER 25, 2015
Designed By:	RJB	Sheet Number:	M-101
Checked By:	DLH		
QC Review:	TJF		
Phase:			

GENERAL NOTES

1. CONTRACTOR SHALL REPAIR, PATCH AND OR REPLACE DUCTS AND INSULATION TO PROVIDE A LEAK FREE AND THERMALLY PROTECTED AIR-DISTRIBUTION SYSTEM.
2. THE EXISTING AIR DISTRIBUTION SYSTEM SHALL BE PROFESSIONALLY CLEANED. THIS INCLUDES ALL DUCTWORK, REGISTERS AND GRILLES. (REFER TO SPECIFICATIONS)
3. TEST AND BALANCE NEW SYSTEMS PER SPECIFICATIONS.
4. CONNECT NEW UNITS TO EXISTING SA AND RA DUCTS. PROVIDE NEW OA DUCT FROM EXISTING INTAKE LOUVER TO RA DUCT. EXISTING DUCT SMOKE DETECTORS TO REMAIN. PROVIDE NEW POWER FEED BACK TO SOURCE AND PROVIDE NEW DISCONNECT AND BREAKER. PROVIDE NEW CONDENSATE LINE AND NEW CHILLED WATER PIPING. BALANCE SYSTEM TO AIRFLOWS INDICATED ON PLANS.

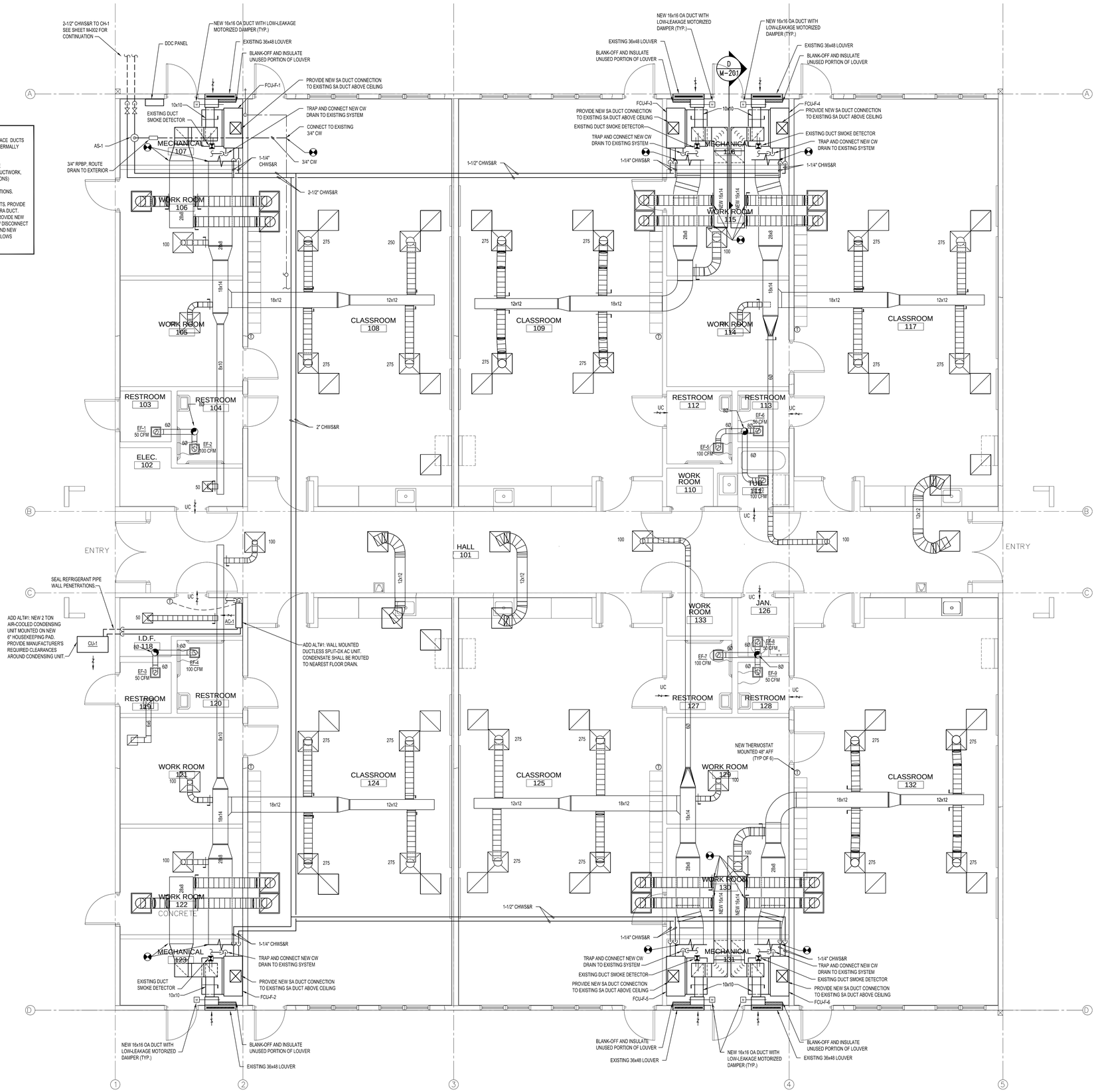

A BLDG F NEW WORK HVAC PLAN

SCALE: 1/4" = 1'-0"

N

ATKINS

482 SOUTH KELLER ROAD
ORLANDO, FL 32810
PHONE: 407.647.7275 FAX: 407.740.8958

CONSULTANT:

CLIENT:

PROJECT NAME:

Orange County John Bridges Community Center Buildings D & F HVAC Replacement

445 W 13th Street Apopka, Fl 32703

100045176

No.	Date	Description

ISSUE LOG

PROFESSIONAL SEALS:

SHEET TITLE:

BLDG F NEW WORK HVAC PLAN

SHEET INFORMATION:

JOB No. 100045178		Date Issued:	OCTOBER 25, 2015
Designed By:	RJB	Sheet Number:	M-102
Checked By:	DLH		
QC Review:	TJF		
Phase:			

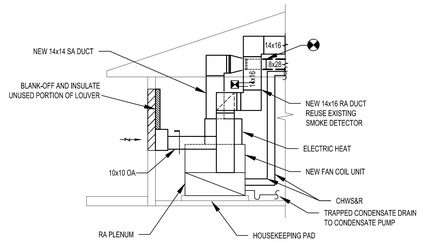

D BLDG F TYPICAL MECH. RM. NEW SECTION

SCALE: 1/4" = 1'-0"

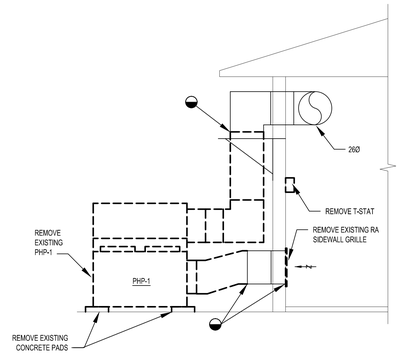

A BLDG D - PHP-1 DEMO SECTION

SCALE: 1/4" = 1'-0"

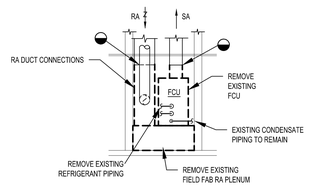

B BLDG D MECH. RM. M100A DEMO SECTION

SCALE: 1/4" = 1'-0"

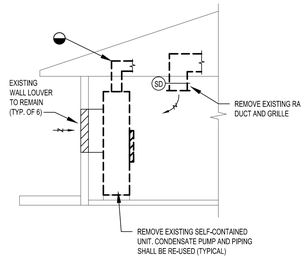

C BLDG F TYPICAL MECH. RM. DEMO SECTION

SCALE: 1/4" = 1'-0"

ATKINS
482 SOUTH KELLER ROAD
ORLANDO, FL 32810
PHONE: 407.647.7275 FAX: 407.740.8958

CONSULTANT:

CLIENT:

PROJECT NAME:

Orange County John Bridges Community Center Buildings D & F HVAC Replacement

445 W 13th Street Apopka, Fl 32703

100045176

No.	Date	Description

ISSUE LOG

PROFESSIONAL SEALS:

SHEET TITLE:

HVAC SECTIONS

SHEET INFORMATION:

JOB No. 100045178		Date Issued:	OCTOBER 25, 2015
Designed By:	RJB	Sheet Number:	M-201
Checked By:	DLH		
QC Review:	TJF		
Phase:			

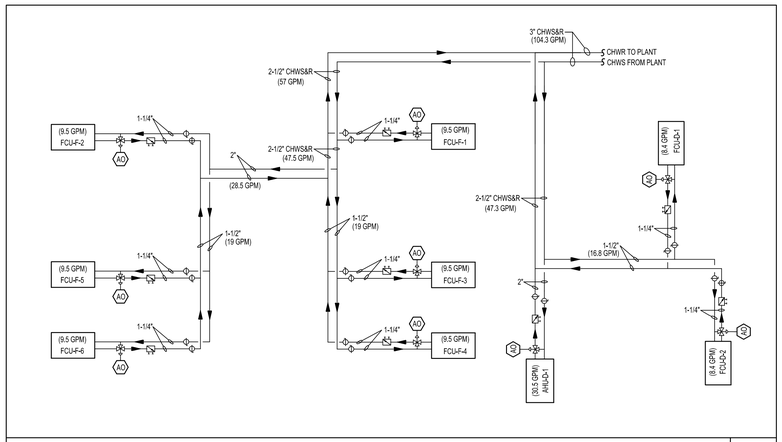

CHILLED WATER DISTRIBUTION PIPING SCHEMATIC
No Scale

5

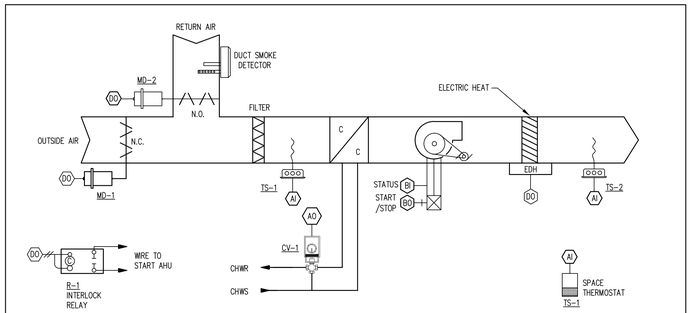

BMCS POINT SCHEDULE

SYSTEM, APPARATUS, OR AREA DESCRIPTION	INPUTS ANALOG: TEMPERATURE	PRESSURE	RH	CFM	INPUTS BINARY: STATUS ON/OFF	FILTER STATUS	SMOKE	AIR FLOW	STATUS OPEN/CLOSE	OUTPUTS BINARY: OPEN/CLOSE	ENABLE/DISABLE	START/STOP	OUTPUTS ANALOG: POSITION (%)	SET POINT ADJ.	MODULATION	ALARMS: HI ANALOG	LOW ANALOG	HI BINARY	LOW BINARY	REMOTE ALARM	SENSOR FAIL	NOTES
SUPPLY FAN (FCU)					●							●								●		1
SUPPLY AIR	●													●		●	●			●		
COOLING COIL CONTROL VALVE (CV-1)									●				●	●	●							
HEATING - ELECTRIC					●																	
OUTSIDE AIR DAMPER (MD-1)									●	●												2

NOTES: 1 PROVIDE DISPLAY ALARM IF SUPPLY FAN FAILS TO START
2 PROVIDE DISPLAY ALARM IF OUTDOOR AIR DAMPER FAILS TO OPEN

SEQUENCE OF OPERATION – CONSTANT VOLUME FAN COIL UNIT

GENERAL: THE SYSTEM CONSISTS OF A CONSTANT VOLUME SA FAN, CHW COIL WITH A THREE-WAY MODULATING VALVE, TWO-POSITION OA DAMPER AND ELECTRIC HEAT. THE UNIT IS DDC CONTROLLED UTILIZING ELECTRIC ACTIVATION.

TYPICAL FCU'S SHALL BE STARTED/STOPPED DURING OCCUPIED/UNOCCUPIED PERIODS AND CONTROLLED ON A SEVEN-DAY SCHEDULE AUTOMATICALLY THROUGH THE LOCAL DDC CONTROLLER WHEN THE H-O-A SWITCH IS IN THE "AUTO" POSITION. IF THE H-O-A SWITCH IS SWITCHED TO THE "HAND" POSITION, THE FAN SHALL BE SIGNALED TO START MANUALLY THROUGH THE BYPASS CONTACTOR.

OCCUPIED MODE: WHEN THE SYSTEM IS SIGNALED TO START, THE NORMALLY CLOSED OA DAMPER SHALL BE OPENED (CONFIRMED BY END SWITCH). AFTER AN ADJUSTABLE TIME DELAY, THE FAN COIL UNIT FANS SHALL START. THE DDC CONTROLLER SHALL MONITOR THE STATUS OF THE FAN COIL UNIT FANS THROUGH A CURRENT SWITCH AT THE FAN MOTOR.

COOLING: THE DDC CONTROLLER SHALL MONITOR THE SPACE TEMPERATURE VIA A SPACE-MOUNTED TEMPERATURE SENSOR. THE CONTROLLER SHALL MAINTAIN SPACE TEMPERATURE AT COOLING SETPOINT 75°F (ADJ.). THE CHW THREE-WAY CONTROL VALVE SHALL MODULATE TO MAINTAIN SPACE TEMPERATURE SETPOINT OF 75°F (ADJ.). UPON A FALL IN SPACE TEMPERATURE BELOW 72°F (ADJ.), THE CHW VALVE BE FULLY CLOSED TO THE COIL.

HEATING: THE HEATING SYSTEM CONSISTS OF ELECTRIC HEATING. UPON A FALL IN SPACE TEMPERATURE BELOW 72°F (ADJ.), THE DDC CONTROLLER SHALL SEND A SIGNAL TO THE CHILLED WATER VALVE TO CLOSE POSITION. WHEN THE SPACE TEMPERATURE HAS DROPPED BELOW 68 °F (ADJ) OR WHEN OUTSIDE AIR TEMPERATURE DROPS BELOW 54 °F (ADJUSTABLE), THE ELECTRIC HEATING COIL SHALL BE ENERGIZED TO MAINTAIN THE HEATING SETPOINT (72 °F ADJUSTABLE).

UNOCCUPIED MODE: THE OA DAMPER SHALL BE CLOSED AND THE FCU SHALL BE OFF. UPON A CALL FOR COOLING OR HEATING TO MAINTAIN UNOCCUPIED SPACE TEMPERATURE SETPOINTS, THE FCU SHALL START AND THE CONTROL VALVE SHALL MODULATE ACCORDING TO THE OPERATING MODE REQUIRED TO MAINTAIN SPACE TEMPERATURE SETPOINT. THE OA DAMPER SHALL REMAIN CLOSED.

OVERRIDE: WHEN A TIMED OVERRIDE MODE IS ENABLED FROM THE DDC CONTROLLER, THE FCU SHALL BE INDEXED TO THE OCCUPIED MODE FOR AN ADJUSTABLE TIME PERIOD OF 2 HOURS.

SAFETIES: ACTIVATION OF THE RETURN AIR DUCT SMOKE DETECTOR OR THE BUILDING FIRE ALARM SYSTEM SHALL AUTOMATICALLY SHUT DOWN THE FCU. THESE SAFETIES SHALL BE INTERLOCKED WITH THE FANS WHEN OPERATING THROUGH THE DDC CONTROLLER OR BYPASS CONTACTOR.

DURING WARM-UP OR COOL DOWN PRIOR TO OCCUPANCY, THE OUTSIDE AIR DAMPER WILL REMAIN CLOSED. THE OPTIMUM START ROUTINE WILL PRESTART THE FAN COIL UNIT TO PRE-HEAT OR COOL THE SPACE PRIOR TO OCCUPANCY.

FAN COIL UNITS
No Scale

4

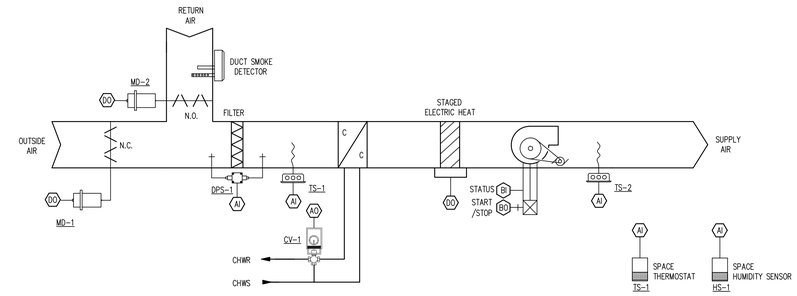

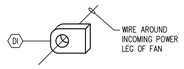

CR-1
CURRENT RELAY: ELECTRICAL PROOF

TYPICAL FAN/PUMP MONITORING
No Scale

3

SEQUENCE OF OPERATION

1) GENERAL: UNIT IS CONSTANT VOLUME AIR HANDLING UNIT (AHU) PROVIDING COOLING, HEATING, AND VENTILATION FOR THE CAFETERIA AREA AS SHOWN ON THE DRAWINGS. THE UNIT WILL BE CONTROLLED LOCALLY BY TEMPERATURE AND HUMIDITY SENSORS LOCATED IN THE CAFETERIA. BMCS WILL BE CAPABLE OF CONTROL BUT WILL UNDER NORMAL OPERATING CONDITIONS ONLY MONITOR THE AHU OPERATION.

2) OPERATION: UPON A CALL TO OPERATE, THE OUTSIDE AIR DAMPER SHALL OPEN TO MINIMUM POSITION, AND THE SUPPLY FAN SHALL START AND RUN CONTINUOUSLY. ALARM BMCS OPERATOR IF THE FAN DOES NOT "PROVE" START OR STOP AFTER CALLED TO OPERATE. WHEN UNIT IS OFF ALL MOTORIZED CONTROL VALVES SHALL BE CLOSED.

3) TEMPERATURE CONTROL:

A) COOLING: WHEN THE SPACE TEMPERATURE SETPOINT (ADJ.) CALLS FOR COOLING, THE COOLING COIL CONTROL VALVE SHALL MODULATE TO MAINTAIN SETPOINT.

B) HEATING: WHEN THE SPACE TEMPERATURE SETPOINT (ADJ.) CALLS FOR HEATING, THE ELECTRIC HEATING COIL SHALL BE ENERGIZED TO MAINTAIN SPACE TEMPERATURE.

4) DEHUMIDIFICATION: WHEN SPACE HUMIDITY SENSOR DETECTS RH ABOVE 65% (ADJ), COOLING COIL CONTROL VALVE SHALL MODULATE FULL OPEN TO DEHUMIDIFY & HEATING COIL SHALL MODULATE TO SATISFY SPACE TEMPERATURE SETPOINT.

5) FILTER STATUS: DIFFERENTIAL PRESSURE SWITCH SHALL ALARM THE BMCS OPERATOR TO SIGNAL FILTER MAINTENANCE SHOULD THE DIFFERENTIAL PRESSURE ACROSS THE FILTER BANK RISE ABOVE PREDETERMINED SETPOINTS (ADJ).

6) SMOKE SHUTDOWN/FIRE ALARM: WHEN SMOKE RETURN AIR DETECTOR ALARMS OR UPON A SIGNAL FROM THE FIRE ALARM SYSTEM, BMCS OPERATOR SHALL BE NOTIFIED & FIRE ALARM SHALL THEN SHUTDOWN THE SUPPLY FAN

BMCS POINT SCHEDULE

SYSTEM, APPARATUS, OR AREA DESCRIPTION	INPUTS ANALOG: TEMPERATURE	PRESSURE	RH	CFM	INPUTS BINARY: STATUS ON/OFF	FILTER STATUS	SMOKE	AIR FLOW	STATUS OPEN/CLOSE	OUTPUTS BINARY: OPEN/CLOSE	ENABLE/DISABLE	START/STOP	OUTPUTS ANALOG: POSITION (%)	SET POINT ADJ.	MODULATION	ALARMS: HI ANALOG	LOW ANALOG	HI BINARY	LOW BINARY	REMOTE ALARM	SENSOR FAIL	NOTES
SUPPLY FAN (AHU-1)					●							●								●		1
SUPPLY AIR	●													●		●	●			●	●	
COOLING COIL CONTROL VALVE (CV-1)									●				●	●	●							
ELECTRIC HEATING COIL					●																	
FILTERS						●												●		●		
OUTSIDE AIR DAMPER (MD-1)									●	●				●								2
DUCT SMOKE DETECTOR (EACH)								●												●		

NOTES: 1 PROVIDE DISPLAY ALARM IF SUPPLY FAN FAILS TO START
2 PROVIDE DISPLAY ALARM IF OUTDOOR AIR DAMPER FAILS TO OPEN

CONSTANT VOLUME AHU (CONSTANT)
No Scale

2

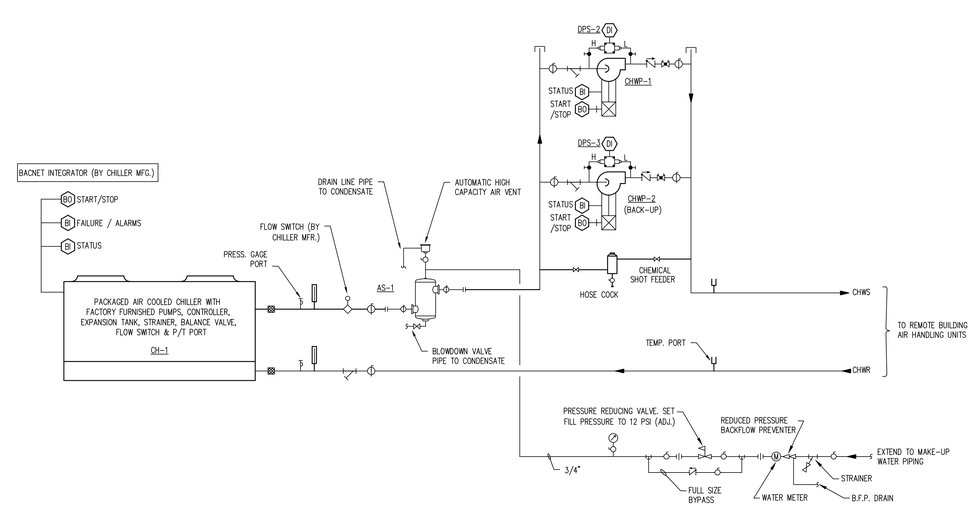

CENTRAL COOLING PLANT SEQUENCE OF OPERATION

CHILLED WATER PLANT GENERAL:

THE CHILLER PLANT SERVING BUILDINGS D& F CONSISTS OF ONE (1) AIR-COOLED SCROLL CHILLER, CH-1, PIPED IN PRIMARY-FLOW CONFIGURATION AND DESIGNED TO PRODUCE CHILLED WATER AT 44°F (ADJ.). CHILLED WATER IS DISTRIBUTED TO THE BUILDINGS BY CONSTANT VOLUME PUMPS, CHWP-1 & CHWP-2, ON DUTY AND STAND-BY OPERATION RESPECTIVELY.

SEQUENCE OF OPERATION:

A. THE BUILDING AUTOMATION SYSTEM (BAS) SHALL CONTROL THE OPERATION OF THE CHILLER PLANT BASED ON AN OPTIMAL START/STOP PROGRAM OR FROM MANUAL COMMAND FROM THE OPERATOR.

B. ON A START COMMAND FROM THE BAS, THE CHILLED WATER SYSTEM SHALL ENABLE THE CHILLER'S CHILLED WATER PUMP AND AFTER FLOW IS PROVEN AT THE CHILLED WATER BARRELS (VIA FLOW SWITCH) THE CHILLER SHALL BE ENABLED TO OPERATE.

C. THE PACKAGED CHILLER DDC CONTROLS SHALL THEN MODULATE THE COMPRESSORS TO MAINTAIN 44°F (ADJ) LEAVING CHILLED WATER SUPPLY TEMPERATURE AT THE CHILLER.

D. BAS SHALL INTERFACE WITH THE CHILLER AND SHALL BE ABLE TO RESET THE CHILLED WATER SUPPLY TEMPERATURE THROUGH THE BAS AND THE PACKAGED CHILLER CONTROLS.

E. IF THE OUTSIDE AIR TEMPERATURE DROPS BELOW 36°F (ADJ) THE CHILLED WATER PUMPS SHALL BE SIGNALED TO START. THE PUMP SHALL CONTINUE TO OPERATE UNTIL THE OUTSIDE AIR TEMPERATURE REACHES 38°F (ADJ) AT WHICH TIME THE PUMP SHALL SHUT OFF.

F. CHILLED WATER PUMPS, CHWP-1 AND CHWP-2, SHALL BE ROTATED FROM DUTY TO STAND-BY ON A WEEKLY BASIS. WHEN CHILLER OPERATION IS DISCONTINUED, THE CHILLER PUMP SHALL CONTINUE TO OPERATE FOR A PERIOD OF ONE MINUTE (ADJ.) TO REMOVE RESIDUAL REFRIGERANT CAPACITY.

ALARMS:

A) IF EITHER CHW PUMP FAILS TO START AFTER BEING CALLED TO OPERATE, THE BAS SHALL ALARM THE OPERATOR AND THE DDC CONTROLLER SHALL ENABLE STAND-BY SYSTEM CHW PUMP.
B) IF CHWS TEMPERATURE RISES ABOVE PREDETERMINED SETPOINT, BAS SHALL ALARM OPERATOR.
C) BMCS SHALL MONITOR GENERAL ALARM FROM PACKAGED CHILLER CONTROLS AND SHALL SIGNAL ALARM TO OPERATOR.

CHILLER PLANT BMCS POINT SCHEDULE

SYSTEM, APPARATUS, OR AREA DESCRIPTION	INPUTS ANALOG: TEMPERATURE (°F)	PRESSURE (PSI)	RH	FLOW (GPM)	UNIT % RUN LOAD AMPS	INPUTS BINARY: STATUS ON/OFF	AIR FLOW	STATUS OPEN/CLOSED	OUTPUTS BINARY: OPEN / CLOSE	ENABLE / DISABLE	START / STOP	OUTPUTS ANALOG: VALVE POSITION	SET POINT ADJUSTMENT	MODULATION	BTUH	ALARMS: HI ANALOG	LOW ANALOG	HI BINARY	LOW BINARY	REMOTE ALARM	SENSOR FAIL	NOTES
LEAVING CHILLED WATER TEMP.	●														●					●		1
RETURNING CHILLED WATER TEMP.	●																					1
CHILLER (CH-1)						●					●										●	1 2
CHWP-1						●					●									●		1
CHWP-2						●					●									●		1

NOTES:
1 AS A MINIMUM, PROVIDE THE ABOVE POINTS OF CONTROL AND/OR MONITORING AT THE BUILDING AUTOMATION SYSTEM. PROVIDE ALL REQUIRED HARDWIRED INTERLOCKS BETWEEN CHILLER AND ASSOCIATED PUMPS, FLOW SWITCHES AND/OR DIFFERENTIAL PRESSURE SWITCHES TO MAINTAIN CHILLER WARRANTY. CONTROLS CONTRACTOR AND CHILLER MANUFACTURER SHALL COORDINATE REQUIREMENTS.
2 PROVIDE GRAPHIC SHOWING INSTANTANEOUS COOLING TONNAGE OUTPUT AND STORE DATA FOR TREND LOGGING.

CHILLED WATER SYSTEM
No Scale

1

ATKINS
482 SOUTH KELLER ROAD
ORLANDO, FL 32810
PHONE: 407.647.7275 FAX: 407.740.8958

CONSULTANT:

CLIENT:

PROJECT NAME:

Orange County John Bridges Community Center Buildings D & F HVAC Replacement

445 W 13th Street Apopka, Fl 32703

100045176

No.	Date	Description

ISSUE LOG

PROFESSIONAL SEALS:

SHEET TITLE:

HVAC CONTROLS

SHEET INFORMATION:

JOB No. 100045178		Date Issued:	OCTOBER 25, 2015
Designed By:	RJB	Sheet Number:	M-301
Checked By:	DLH		
QC Review:	TJF		
Phase:			

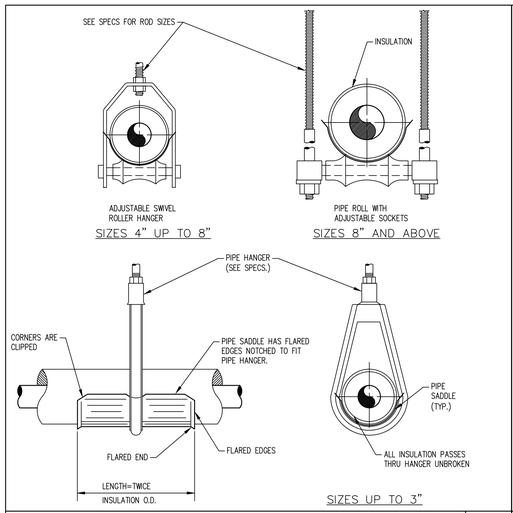

INSULATED PIPE HANGER | 11
No Scale

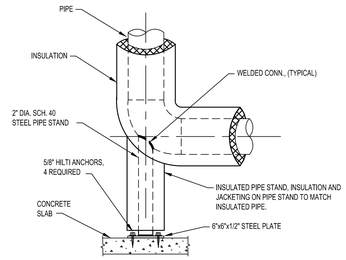

INSULATED VERTICAL PIPE SUPPORT | 8
No Scale

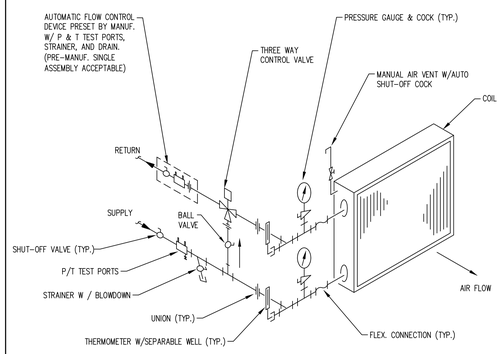

NOTES: 1. PROVIDE (4 x DIA.) OF STRAIGHT PIPE ON BOTH SIDES OF BALANCING VALVE
2. ALL COMPONENTS FULL LINE SIZE UNLESS NOTED OTHERWISE
3. LOCATE UNIONS TO ALLOW FOR COIL PULL

3-WAY COIL PIPING DIAGRAM | 6
No Scale

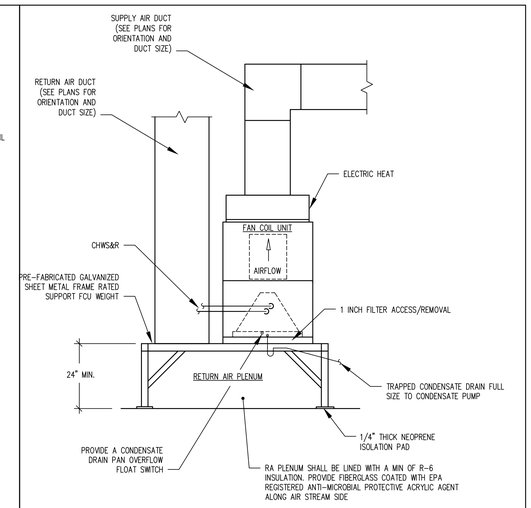

TYP. VERTICAL FAN COIL UNIT DETAIL | 3
No Scale

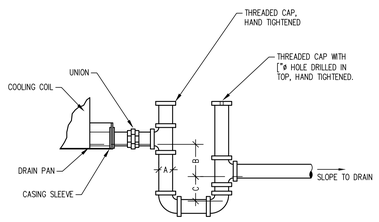

CONDENSATE DRAIN PIPING DIMENSIONS:

A = FULL SIZE OF UNIT DRAIN CONNECTION
B ≥ 1½ TIMES FAN SUCTION STATIC PRESSURE
C ≥ FAN DISCHARGE STATIC PRESSURE PLUS 1 INCH

COORDINATE MOUNTING/CURB HEIGHT AS REQUIRED TO PROVIDE PROPER CONDENSATE DRAINAGE.

AHU CONDENSATE DRAIN TRAP | 10
No Scale

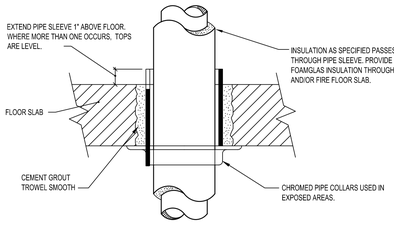

PIPE FLOOR SLAB PENETRATION | 7
No Scale

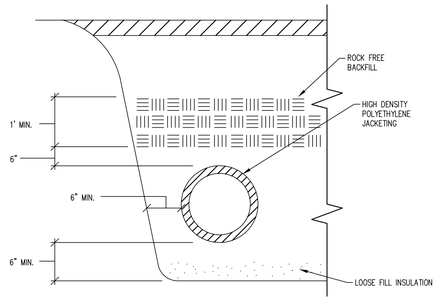

UNDERGROUND PIPING INSTALLATION | 5
No Scale

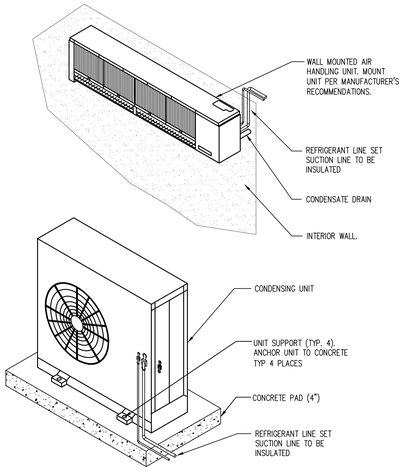

ADD ALT #1 – DUCTLESS DX SPLIT SYSTEMS | 2
No Scale

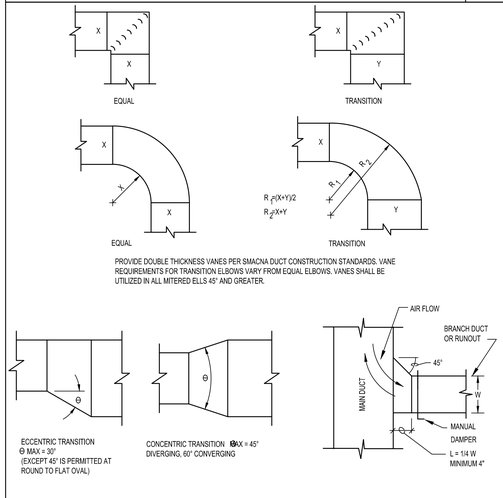

LOW VELOCITY BRANCH DUCT, ELBOWS & TRANSITIONS | 9
No Scale

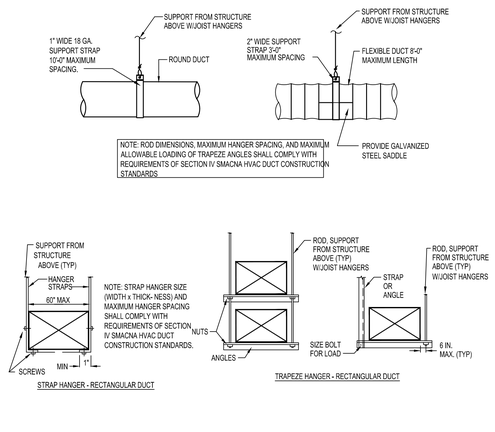

ROUND/RECTANGULAR DUCT SUPPORTS | 4
No Scale

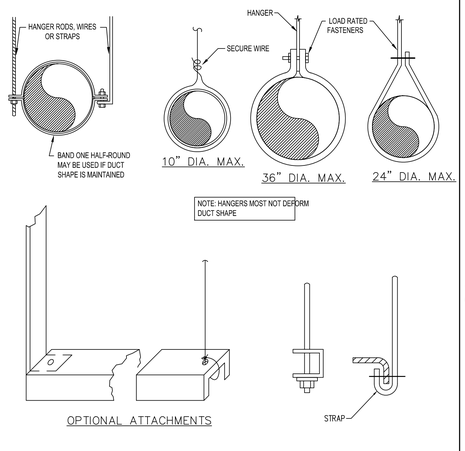

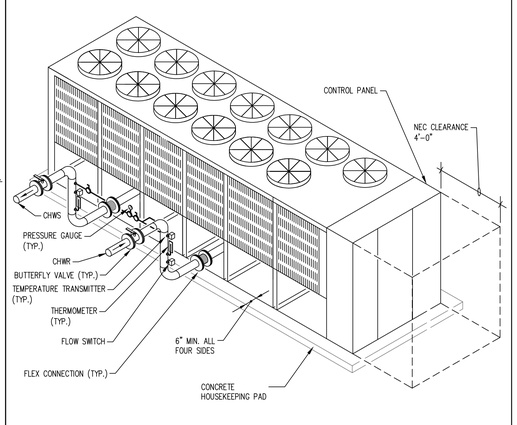

PACKAGED AIR COOLED CHILLER PIPING | 1
No Scale

ATKINS
482 SOUTH KELLER ROAD
ORLANDO, FL 32810
PHONE: 407.647.7275 FAX: 407.740.8958

CONSULTANT:

CLIENT:

PROJECT NAME:

Orange County John Bridges Community Center Buildings D & F HVAC Replacement

445 W 13th Street Apopka, Fl 32703

100045176

No.	Date	Description

ISSUE LOG

PROFESSIONAL SEALS:

SHEET TITLE:

HVAC DETAILS

SHEET INFORMATION:

JOB No. 100045178		Date Issued:	OCTOBER 25, 2015
Designed By:	RJB	Sheet Number:	M-401
Checked By:	DLH		
QC Review:	TJF		
Phase:			

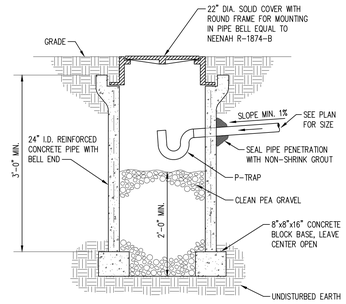

DRY WELL
No Scale

3

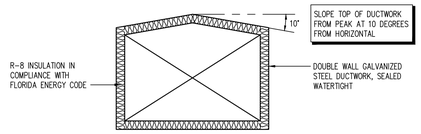

SECTIONAL VIEW THROUGH TYPICAL ROOFTOP DUCTWORK

EXTERIOR DUCTWORK
No Scale

2

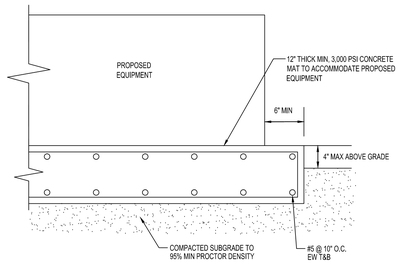

NOTE: ANCHORAGE TO CONCRETE TO BE PROVIDED AND DETAILED BY MFTR

CONCRETE PAD DETAIL (AHU-D-1 AND CH-1)
No Scale

1

ATKINS

482 SOUTH KELLER ROAD
ORLANDO, FL 32810
PHONE: 407.647.7275 FAX: 407.740.8958

CONSULTANT:

CLIENT:

PROJECT NAME:

Orange County John Bridges Community Center Buildings D & F HVAC Replacement

445 W 13th Street Apopka, Fl 32703

100045176

No.	Date	Description

ISSUE LOG

PROFESSIONAL SEALS:

SHEET TITLE:

HVAC DETAILS

SHEET INFORMATION:

JOB No. 100045178		Date Issued:	OCTOBER 25, 2015
Designed By:	RJB	Sheet Number:	M-402
Checked By:	DLH		
QC Review:	TJF		
Phase:			

AHU-D-1 REBALANCE SCHEDULE

	SUPPLY	RETURN	OUTSIDE AIR
OLD	10,500	6,750	3,750
NEW	2,900	1,480	1,420

AIR HANDLING UNIT SCHEDULE CHW/EH

PLAN MARK	MODEL NO.	UNIT TYPE	UNIT COMPONENTS IN DIRECTION OF AIR FLOW SEE LEGEND BELOW	AIR FLOWS		FAN DATA						COOLING COIL												HEATING COIL					
												DESIGN CONDITIONS				CAPACITY		AIR DATA		WATER DATA				AIR DATA		MIN.	HEATER DATA		
												EAT		LAT		SEN.	TOTAL	MAX. VEL.	MIN.	TEMP. °F		FLOW	WPD	TEMP. °F		AIRFLOW	KW	CONTROL	VOLTS/
				TOTAL CFM	OA CFM	EXT. SP	WHEEL TYPE	MAX. RPM	MOTOR HP	VOLT/ PHASE	VFD	DB	WB	DB	WB	MBH	MBH	FPM	ROWS	ENT.	LVG.	GPM	(FT.WC)	ENT.	LVG.	(CFM)			PHASE
AHU-D-1	39M	OUTDOOR MODULAR	MXB - FLT - FFL - CCL - EHC - MAC - FAN	2900	1420	1.0	DIRECT	2069	3.0	240/3	NO	81.4	71.9	51	50.8	94	184	380	8	44	56	30.5	5.0	53.2	96.8	2900	40	VERNIER	240/3

COMPONENTS LEGEND

MXB - MIXING BOX
FMXB - MIXING BOX WITH FILTERS.
EHC - ELECTRIC HTNG COIL
CCL - COOLING COIL
FAN - FAN
PFL - FLAT FILTER
FLT - PRE-FILTERS
FFL - FINAL FILTERS
PLN - PLENUM
SAC - SMALL ACCESS
MAC - MEDIUM ACCESS
LAC - LARGE ACCESS
XFB - EXTERNAL FACE & BYPASS
IFB - INTERNAL FACE & BYPASS
DIF - DIFFUSER
ECO - ECONOMIZER

NOTES:
1. MODEL NUMBERS AND EQUIPMENT SELECTIONS BASED ON CARRIER.
2. AIR PRESSURE DROP FOR FILTERS SHALL INCLUDE A 0.5" DIRTY FILTER ALLOWANCE.
3. CAPACITIES SHOWN ARE MINIMUM. AIR AND WATER PRESSURE DROPS ARE MAXIMUM.
4. FILTER EFFICIENCY BASED ON ASHRAE 52.1-1992 TEST METHOD.
5. FILTER EFFICIENCY SHALL BE 85% WITH A 2" 35% PRE-FILTER.

FAN COIL UNIT WITH ELECTRIC HEAT SCHEDULE

PLAN MARK	MODEL NO.	SUPPLY AIRFLOW (CFM)	OUTDOOR AIRFLOW (CFM)	EXT SP (IN.WC)	COOLING COIL DATA									HEATING COIL DATA					FAN & MOTOR DATA					ELECTRICAL DATA		SERVICE
					MIN.SEN. MBH	MIN.TOT. MBH	EAT (°F)		LAT (°F)		WATER TEMP. °F		FLOW GPM	MIN.TOT. (KW)	EAT DB °F	LAT DB °F	STEPS	VOLT/ PHASE	DRIVE TYPE	HP	FLA	RPM	VOLTS/ PHASE	MCA	MOCP	
							DB	WB	DB	WB	ENT.	LVG.														
FCU-D-1	20MBE10	1500	140	0.44	38.4	55.7	80	67	55.0	54.5	44	55	10.5	10	65	86	1	240/1	DIRECT	3/4	5.0	NA	120/1	60	60	BLDG D - ADMINISTRATION
FCU-D-2	12MBE10	1200	220	0.35	28.2	41.0	80	67	55.1	54.6	44	54.3	8.0	10	60	86	1	240/1	DIRECT	1/3	2.5	NA	120/1	56	60	BLDG D - KITCHEN
FCU-F-1	42BVE16	1300	450	0.3	40	57.2	82	68	54.3	53.8	44	56	9.5	10	60	85	3	208/3	BELT	3/4	3.6	816	208/3	40	50	BLDG F - CLASSROOM 108
FCU-F-2	42BVE16	1300	450	0.3	40	57.2	82	68	54.3	53.8	44	56	9.5	10	60	85	3	208/3	BELT	3/4	3.6	816	208/3	40	50	BLDG F - CLASSROOM 124
FCU-F-3	42BVE16	1300	450	0.3	40	57.2	82	68	54.3	53.8	44	56	9.5	10	60	85	3	208/3	BELT	3/4	3.6	816	208/3	40	50	BLDG F - CLASSROOM 109
FCU-F-4	42BVE16	1300	450	0.3	40	57.2	82	68	54.3	53.8	44	56	9.5	10	60	85	3	208/3	BELT	3/4	3.6	816	208/3	40	50	BLDG F - CLASSROOM 125
FCU-F-5	42BVE16	1300	450	0.3	40	57.2	82	68	54.3	53.8	44	56	9.5	10	60	85	3	208/3	BELT	3/4	3.6	816	208/3	40	50	BLDG F - CLASSROOM 117
FCU-F-6	42BVE16	1300	450	0.3	40	57.2	82	68	54.3	53.8	44	56	9.5	10	60	85	3	208/3	BELT	3/4	3.6	816	208/3	40	50	BLDG F - CLASSROOM 132

NOTES:
1. MODEL NUMBERS AND EQUIPMENT SELECTIONS FOR BLDG D ARE BASED ON FIRST CO.
2. MODEL NUMBERS AND EQUIPMENT SELECTIONS FOR BLDG F ARE BASED ON CARRIER.
3. MAX APD ACROSS CHW COIL SHALL BE 0.5 IN (WC)
4. MAX WPD ACROSS CHW COIL SHALL BE 10 FT (WC)
5. MAX APD ACROSS HTG COIL SHALL BE 0.5 IN (WC)
6. PROVIDE A CONDENSATE PUMP WITH SAFETY SWITCH FOR EACH FCU.
7. WIRE SAFETY SWITCH TO SHUT OFF UNIT AND SEND ALARM TO BAS SYSTEM.
8. PROVIDE DISCONNECT SWITCH AND SINGLE POINT ELECTRICAL CONNECTION.

PACKAGED AIR COOLED WATER CHILLER SCHEDULE

PLAN MARK	MODEL NO.	COOLING CAPACITY				WATER DATA				CONDENSER FAN		ELECTRICAL DATA			
		MIN. TONS	AMB. TEMP	COMP. TYPE	MAX # COMP.	FLOW (GPM)	MAX PD (FT)	EWT	LWT	NO.	HP	KW/ TON	MIN. CIR. AMPS.	MOCP	VOLT/ PHASE/ HERTZ
CH-1	30RAP060	52.4	105	SCROLL	1	104.3	24	56	44	4	2	1.37	273.8	300.0	208/3/60

NOTES:
1. BASIS OF DESIGN: CARRIER AQUASNAP UTILIZING R-410A REFRIGERANT.
2. FURNISH WITH SINGLE POINT CONNECTION, NON-FUSED DISCONNECT, ULTRA LOW SOUND, HAIL GUARDS AND HYDRONIC PACKAGE INCLUDING STRAINER/BLOW-DOWN VALVE, EXPANSION TANK, DUAL PUMPS (5 HP HIGH HEAD), AIR VENT CONNECTION PORTS, P/T ACCESS PORT, FLOW SWITCH AND BALANCING VALVE/DRAIN PLUG.

ADD ALT#1 AIR HANDLING UNIT SCHEDULE (DX SPLIT)

PLAN MARK	MODEL NUMBER	COND. UNIT PLAN MARK	TOTAL AIR CFM	EXT. S.P.	COOLING CAPACITY						ELECTRICAL DATA				
					TOT. MBH	SENS. MBH	EAT DB	EAT WB	LAT DB	LAT WB	FAN WATTS	FAN FLA	MCA	MOCP	VOLT/ PHASE
AC-1	PKA-A24KA4	CU-1	635	0.2	24.0	24.0	75	64	62	59	56	0.036	1	26	208/1

NOTES:
1. BASIS OF DESIGN: MITSUBISHI.
2. PROVIDE SINGLE POINT ELECTRICAL CONNECTION. STARTER, RELAY AND CONTROLS TO BE PART OF SPLIT-DX SYSTEM.
3. SEER 17 BTU/H/W.
4. PROVIDE FILTERS PER MANUFACTURER'S RECOMMENDATION.

PUMP SCHEDULE

PLAN MARK	MODEL NO.	SYSTEM	FLUID DATA			PUMP DATA					ELECTRICAL DATA			
			FLOW GPM	HEAD FT	FLUID TEMP	TYPE	IMPELLER SIZE	% EFF.	SUCT. SIZE	DISCH. SIZE	VFD YES/NO	MOTOR HP	MOTOR RPM	VOLTS/ PHASE
CHWP-1	e-90 2AAC	CHW	104.3	83.2	44	IN-LINE CLOSE COUPLED	4.75	74.74	2"	2"	NO	5	3450	208/3
CHWP-2	e-90 2AAC	CHW	104.3	83.2	44	IN-LINE CLOSE COUPLED	4.75	74.74	2"	2"	NO	5	3450	208/3

NOTES:
1. BASIS OF DESIGN CARRIER AQUASNAP. REFER TO SPECIFICATIONS FOR LIST OF APPROVED EQUIVALENT MANUFACTURERS.
2. PUMPS ARE REDUNDANT AND ARE ROTATED FROM DUTY TO STAND-BY ON A WEEKLY BASIS.

ADD ALT #1 AIR COOLED CONDENSING UNIT SCHEDULE

PLAN MARK	MODEL NO.	COOLING CAPACITY				ELECTRICAL DATA				PIPING DATA		WEIGHT LBS.
		MIN. MBH	AMB. TEMP	REF. TEMP	NO. COMP.	NO. FANS	MCA	MOCP	VOLT/ PHASE	GAS O.D.	LIQUID O.D.	
CU-1	PUY-A24NHA4	24.0	110	R-410A	1	1	18	30	208/1	5/8"	3/8"	165

NOTES:
1. MODEL NUMBERS AND SELECTIONS ARE BASED ON MITSUBISHI.
2. PROVIDE WIND BAFFLE FOR FULL-CAPACITY COOLING DOWN TO ZERO DEGREES OUTDOOR AMBIENT.

EXPANSION SYSTEM SCHEDULE

PLAN MARK	MODEL NO.	SYSTEM	SYSTEM TEMP.		INITIAL PRESS. PSIG	TANK SIZE GAL.	MAX. PRESS. PSIG	AIR SEPARATOR				MAKE-UP WATER SIZE
			MIN.	MAX.				MODEL NO.	INLET SIZE	GPM	MAX. PD	
AS/ET	AX-15	CHW	44	80	10	7.8	45	2-1/2-AS-L	2-1/2	105	0.8	3/4"

NOTES:
1. EXPANSION TANK BASIS OF DESIGN IS CARRIER AQUASNAP. AIR SEPARATOR BASIS OF DESIGN IS AMTROL. REFER TO SPECIFICATIONS FOR LIST OF APPROVED EQUIVALENT MFR.

ATKINS
482 SOUTH KELLER ROAD
ORLANDO, FL 32810
PHONE: 407.647.7275 FAX: 407.740.8958

CONSULTANT:

CLIENT:

PROJECT NAME:

Orange County John Bridges Community Center
Buildings D & F HVAC Replacement
445 W 13th Street Apopka, Fl 32703
100045176

No.	Date	Description

ISSUE LOG

PROFESSIONAL SEALS:

SHEET TITLE:

HVAC SCHEDULES

SHEET INFORMATION:

JOB No. 100045178 | Date Issued: OCTOBER 25, 2015

Designed By: RJB
Checked By: DLH
QC Review: TJF
Phase:

Sheet Number: M-501

BOXES AND FITTINGS

60/3 — NON-FUSED SAFETY SWITCH, 3 = NO. OF POLES, 60 = SWITCH SIZE. 600 V. UNLESS OTHERWISE NOTED.

3 60/50 — FUSED SAFETY SWITCH, 3 = NO. OF POLES, 60 = SWITCH SIZE, 50 = FUSES SIZE. 600 V. UNLESS OTHERWISE NOTED.

3P,3R 30/3 — FUSED SAFETY SWITCH COMBINATION STARTER, 3 = NO. OF POLES, 30 = MCP, 0 = NEMA STARTER SIZE, 3R = ENCLOSURE NEMA 1 UNLESS NOTED. 600V UNLESS OTHERWISE NOTED.

3 100/70 — INDIVIDUALLY MOUNTED ENCLOSED CIRCUIT BREAKER, 3 = NO. OF POLES, 100 = FRAME SIZE, 70 = TRIP RATING. 600 V. UNLESS OTHERWISE NOTED.

$M — 20A. MOTOR RATED SWITCH.

RECEPTACLES

DUPLEX RECEPTACLE, 2P, 3W, GROUNDING TYPE, 20A, 125V, NEMA 5-20R. MOUNT 18" A.F.F. U.O.N.

GFI — DUPLEX RECEPTACLE – SAME AS ABOVE EXCEPT WITH INTEGRAL GROUND FAULT CIRCUIT INTERRUPTER.

GFI/WP — DUPLEX CONVENIENCE RECEPTACLE – SAME AS ABOVE EXCEPT WITH 2-FLAP, SPRING-HINGED, GASKETED AND WEATHERPROOF COVER.

DOUBLE DUPLEX RECEPTACLE IN ONE OUTLET BOX, 2P, 3W, GROUNDING TYPE, 20A, 125V, NEMA 5-20R. MOUNT 18" A.F.F. U.O.N.

BOXES AND FITTINGS

J — CEILING OR FLOOR MOUNTED JUNCTION BOX

H J — WALL MOUNTED JUNCTION BOX

SWITCHES

$a — SINGLE POLE TOGGLE SWITCH. 20A., 120/277 VAC. MOUNTED 4'-0" A.F.F. "a" = SWITCH LEG.

$3 $4 — THREE-WAY AND FOUR-WAY TOGGLE SWITCHES, 20A., 120/277 VAC. MOUNTED 4'-0" A.F.F.

$M — 20A. MOTOR RATED SWITCH WITH OVERLOADS.

LEGEND

EXISTING

DEMOLITION

NEW

WIRING

A-1 — SINGLE CIRCUIT HOMERUN TO PANEL WITH MINIMUM OF 2 #12AWG CIRCUIT WIRES AND 1 #12AWG GROUND WIRE IN A 3/4" CONDUIT, U.O.N.: "A" INDICATES PANEL DESIGNATION, NUMBER INDICATES CIRCUIT DESIGNATION.

INDICATES A CAPPED CONDUIT.

INDICATES A FLEXIBLE METAL CONDUIT CONNECTION. USE LIQUID TIGHT CONDUIT IN WET, DAMP OR OILY LOCATIONS.

POWER DISTRIBUTION

POWER OR LIGHTING CIRCUIT BREAKERS PANEL RECESSED MOUNTED ON WALL, SIZE AS INDICATED. DASHED LINE INDICATES REQUIRED CLEARANCE.

POWER OR LIGHTING CIRCUIT BREAKERS PANEL SURFACE MOUNTED ON WALL, SIZE AS INDICATED. DASHED LINE INDICATES REQUIRED CLEARANCE.

5 — MOTOR. WHEN SHOWN, NUMBER INSIDE INDICATES HORSEPOWER.

R — RELAY

POWER COMPANY TRANSFORMER

ABBREVIATIONS

A	AMPERES
A.F.F.	ABOVE FINISHED FLOOR
A.F.C.	AVAILABLE FAULT CURRENT
A.H.J.	AUTHORITY HAVING JURISDICTION
A.I.C.	AMPERES INTERRUPTING CAPACITY, SYMMETRICAL
A.T.S.	AUTOMATIC TRANSFER SWITCH
CKT.	CIRCUIT
COND., C.	CONDUIT
DISC.	DISCONNECT
ENCL.	ENCLOSURE
F.A.C.P.	FIRE ALARM CONTROL PANEL
GFI	GROUND FAULT INTERRUPTER
GND, G.	GROUND
GRS	GALVANIZED RIGID STEEL CONDUIT
HACR	HEATING, AIR CONDITIONING, AND REFRIGERATION
HP	HORSE POWER
IG	ISOLATED GROUND
KW	KILOWATT
MCC	MOTOR CONTROL CENTER
NEC	NATIONAL ELECTRICAL CODE
PNL.	PANELBOARD
PVC	POLYVINYL CHLORIDE CONDUIT
SSCP	SYSTEM SECURITY CONTROL PANEL
U.O.N.	UNLESS OTHERWISE NOTED
XFMR	TRANSFORMER
WP	INDICATES WEATHERPROOF EQUIPMENT

GENERAL NOTES

1. THE WORK PRACTICES EMPLOYED ON THIS PROJECT SHALL AT ALL TIMES COMPLY WITH OR EXCEED THE LATEST ADOPTED EDITION OF THE NEC (NATIONAL ELECTRICAL CODE). ELECTRICAL CONTRACTOR SHALL PROVIDE OR OBTAIN ALL REQUIRED LABOR, MATERIAL, EQUIPMENT, INSURANCE, TOOLS, PERMITS, INSPECTIONS, ETC. TO PERFORM THE PROJECT ELECTRICAL WORK AS PER NEC, LOCAL AGENCIES, AND OWNER REQUIREMENTS.
2. A COPPER EQUIPMENT GROUNDING CONDUCTOR, SIZED AS PER TABLE 250-122 OF THE 2008 OR LATEST ADOPTED NEC, SHALL BE INSTALLED IN EVERY RACEWAY AND EFFECTIVELY TERMINATED AT EACH DEVICE. UNLESS NOTED OTHERWISE, MINIMUM WIRES SIZE FOR PHASE, NEUTRAL AND GROUND SHALL BE #12AWG AND MINIMUM CONDUIT SIZE SHALL BE 3/4". CONDUCTOR INSULATION SHALL BE RATED FOR 600 VOLTS AND THWN.
3. ELECTRICAL CONTRACTOR SHALL PROVIDE REQUIRED RACEWAY FOR A/C CONTROLS AS REQUIRED. FIELD COORDINATE WITH OTHER TRADES.
4. ELECTRICAL CONTRACTOR SHALL BE RESPONSIBLE FOR CUTTING AND PATCHING REQUIRED TO PERFORM THE ELECTRICAL WORK. OWNER/GENERAL CONTRACTOR SHALL BE NOTIFIED BEFORE STARTING CUTTING AND PATCHING, AND SHALL BE DONE IN SUCH A MANNER THAT WILL NOT AFFECT THE BUILDING STRUCTURE. ELECTRICAL CONTRACTOR SHALL BE RESPONSIBLE FOR DAMAGE AS A RESULT OF THE CUTTING AND PATCHING AND SHALL PROVIDE A CODE COMPLIANCE SOLUTION TO RESTORE THE BROKEN SYSTEMS AT NO EXTRA CHARGE.
5. ELECTRICAL CONTRACTOR SHALL FOLLOW OWNER/GENERAL CONTRACTOR, NATIONAL AND LOCAL AGENCIES, ETC. SAFETY REGULATIONS PROCEDURES. ELECTRICAL CONTRACTOR SHALL PROVIDE ADEQUATE EQUIPMENT AND WORKING AREA PROTECTION TO PREVENT INJURIES TO PEOPLE AND DAMAGE TO PROPERTY.
6. ELECTRICAL CONTRACTOR SHALL FULLY TEST ELECTRICAL SYSTEMS UPON COMPLETION OF WORK.
7. LABEL EACH SWITCH, RECEPTACLE, PANEL, AND JUNCTION BOXES WITH SOURCE PANEL AND CIRCUIT NUMBER.
8. VERIFY PHASE ROTATION ON THREE-PHASE EQUIPMENT (DISCONNECTS, RECEPTACLES, ETC.)
9. CIRCUIT BREAKERS SHALL BE BOLT-ON TYPE. CIRCUIT BREAKERS PROTECTING POWER PANELS, TRANSFORMERS, AND MOTORS SHALL BE 100%. CIRCUIT BREAKERS PROTECTING HEATING, AIR CONDITIONING AND REFRIGERATION EQUIPMENT SHALL BE HACR RATED.
10. POWER AND COMMUNICATION DISTRIBUTION CONDUITS AND HOME RUNS SHALL BE RUN ABOVE THE BOTTOM CHORD OF TRUSSES TO AVOID FIRE RATED WALL PENETRATIONS. IF A FIRE WALL PENETRATION IS REQUIRED, THE ELECTRICAL CONTRACTOR SHALL USE AND PROVIDE A WALL PENETRATION PROCEDURE AND INSTALLATION APPROVED BY THE A.H.J. FOR THE FIRE RATED WALL TO BE PENETRATED.
11. THE CONTRACTOR SHALL VISIT THE SITE AND EXAMINE CONDITIONS BEFORE SUBMITTING A BID. NO ADDITIONAL PAYMENT SHALL BE RECEIVED ABOVE BID PRICE FOR WORK THAT CAN BE INFERRED THROUGH OBSERVATION OF EXISTING CONDITIONS.
12. CONTRACTOR SHALL COORDINATE ALL WORK WITH OTHER TRADES. THE CONTRACTOR SHALL TAKE INTO ACCOUNT SPECIAL OPERATING REQUIREMENTS WHICH MAY AFFECT NORMAL WORKING AND ACCESS CONDITIONS.
13. RACEWAY ON PLAN DRAWINGS ARE SHOWN DIAGRAMMATICALLY, CONTRACTOR TO SELECT THE MOST FEASIBLE ROUTING.
14. ELECTRICAL CONTRACTOR SHALL VERIFY LOCATION, SIZE, CONNECTION POINT AND LOAD OF ALL EQUIPMENT BEING FURNISHED BY GENERAL CONTRACTOR, OR OWNER BEFORE ROUGH-IN OF ANY CONDUIT, AND NOTIFY THE ENGINEER OF ANY DISCREPANCIES.
15. CONDUCTORS FROM DISCONNECTS TO MOTORS SHALL BE OF THE SAME SIZE AS FROM STARTER TO DISCONNECT. GROUNDING CONDUCTORS SHALL BE SIZED AS PER N.E.C. (NATIONAL ELECTRICAL CODE) SECTION 250.

ATKINS

482 SOUTH KELLER ROAD
ORLANDO, FL 32810
PHONE: 407.647.7275 FAX: 407.740.8958

CONSULTANT:

CLIENT:

PROJECT NAME:

Orange County John Bridges Community Center
Buildings D & F HVAC Replacement
445 W 13th Street Apopka, Fl 32703
100045176

No.	Date	Description

ISSUE LOG

PROFESSIONAL SEALS:

SHEET TITLE:

ELECTRICAL SYMBOLS LEGEND AND GENERAL NOTES

SHEET INFORMATION:

JOB No. 100045178		Date Issued:	OCTOBER 25, 2015
Designed By:	LF	Sheet Number:	E-000
Checked By:	FL		
QC Review:	GFH		
Phase:			

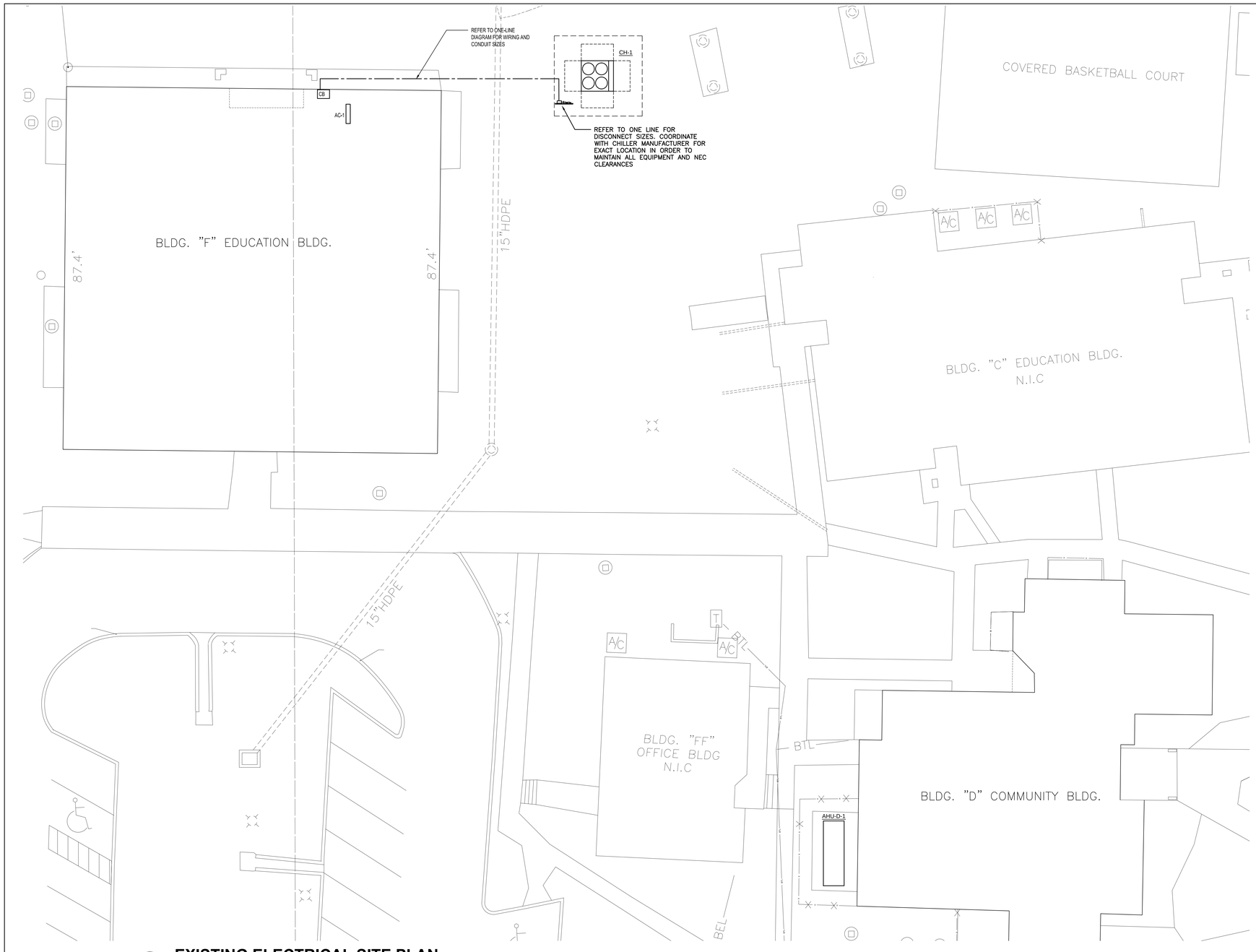

A EXISTING ELECTRICAL SITE PLAN

SCALE: 3/32" = 1'-0"

ONE-LINE GENERAL NOTES:

1. EXISTING EQUIPMENT IS SHOWN FOR INFORMATION PURPOSES ONLY AND SHALL REMAIN AS IS, UNLESS NOTED OTHERWISE.
2. DRAWINGS ARE BASED ON EXISTING DRAWINGS FROM "PENINSULA ENGINEERING INC," DATED 03/15/2001 CONTRACTOR SHALL FIELD VERIFY EXISTING CONDITIONS AND CONTACT CONTRACTING OFFICER IF DISCREPANCIES ARE FOUND.

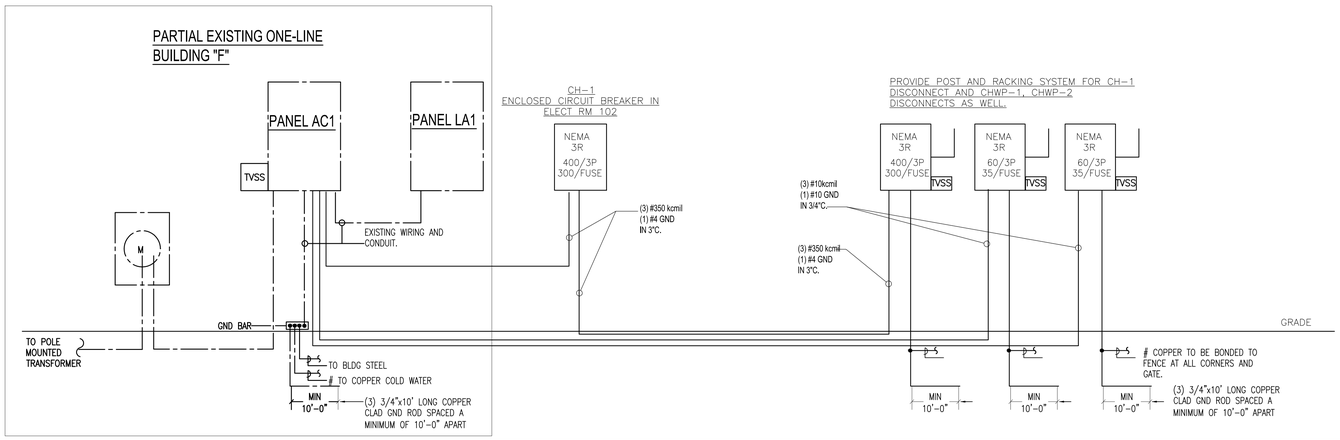

ATKINS

482 SOUTH KELLER ROAD
ORLANDO, FL 32810
PHONE: 407.647.7275 FAX: 407.740.8958

CONSULTANT:

CLIENT:

PROJECT NAME:

Orange County John Bridges Community Center Buildings D & F HVAC Replacement

445 W 13th Street Apopka, Fl 32703

100045176

No.	Date	Description

ISSUE LOG

PROFESSIONAL SEALS:

SHEET TITLE:

EXISTING ELECTRICAL SITE PLAN

SHEET INFORMATION:

JOB No. 100045178		Date Issued:	OCTOBER 25, 2015
Designed By:	LF	Sheet Number:	E-002
Checked By:	FL		
QC Review:	GFH		
Phase:			

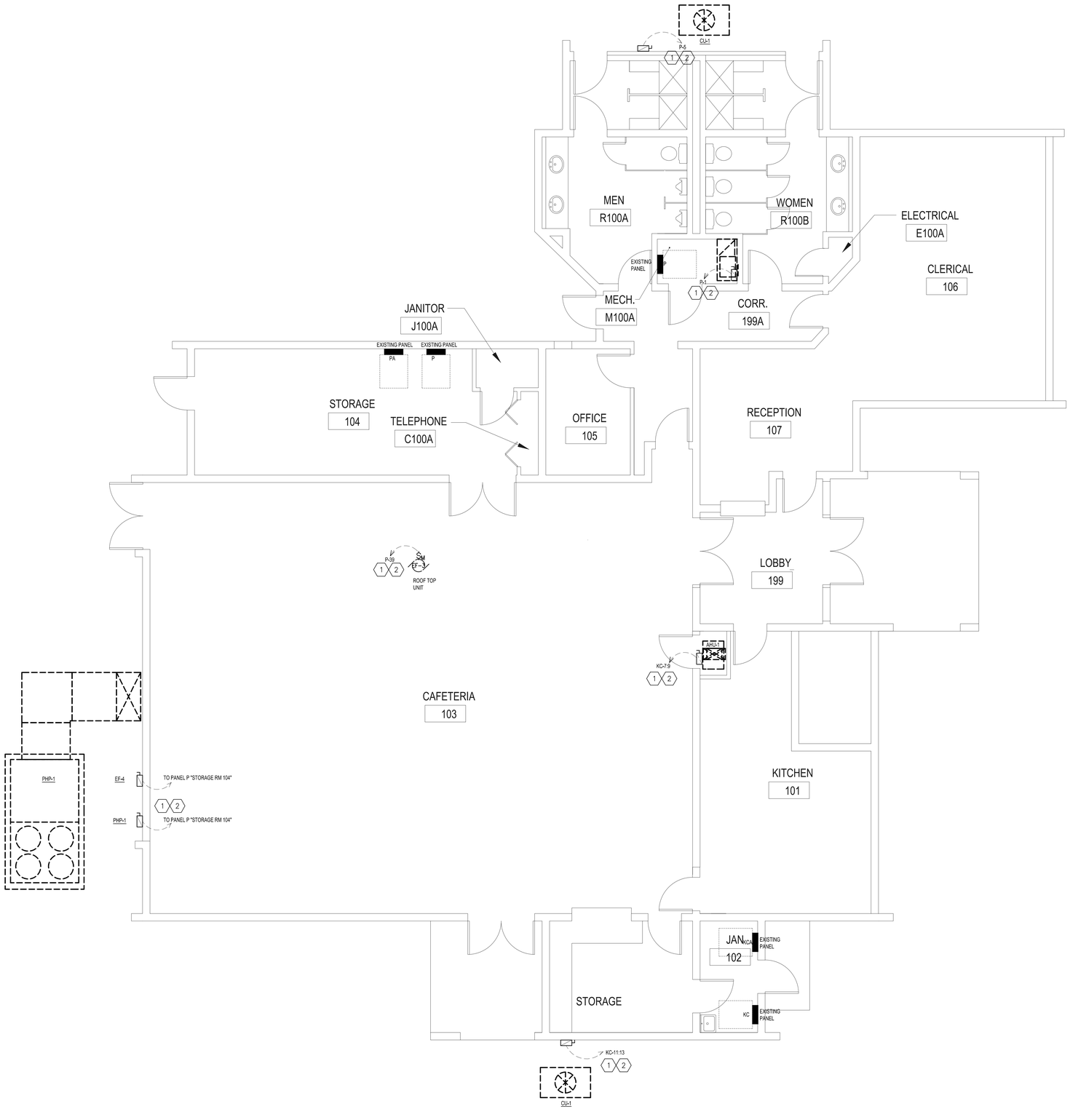

A **BLDG D ELECTRICAL DEMO PLAN**

SCALE: 1/4" = 1'-0"

N

GENERAL NOTES:

1. ALL DEVICES AND EQUIPMENT SHOWN ON THIS PLAN ARE EXISTING. REFER TO SYMBOL LEGEND FOR DESCRIPTION.
2. EXISTING CONDITIONS SHOWN ON THESE DRAWINGS ARE BASED ON ORIGINAL DRAWINGS AND FIELD INVESTIGATION. ALL EXISTING CONDITIONS MUST BE CONFIRMED PRIOR TO BID. FIELD CONDITIONS SHALL GOVERN IN CASE OF DISCREPANCIES.
3. ALL CONDUITS/ RACEWAYS SERVING OTHER AREAS THAT RUN THROUGH THE PROJECT AREA SHALL REMAIN ACTIVE DURING THE CONSTRUCTION, SO AS NOT TO CAUSE ANY DISRUPTION TO THESE OTHER SPACES. IT IS THE CONTRACTOR'S RESPONSIBILITY TO ENSURE THAT ALL CONDUITS, NEW OR EXISTING, WITHIN THE PROJECT AREA ARE PROPERLY SUPPORTED AND PROVIDE WITH BONDING BUSHINGS IN ACCORDANCE WITH THE NATIONAL ELECTRICAL CODE.
4. ALL ITEMS REMOVED DURING THIS PROJECT SHALL BE DISPOSED OF OR TURNED OVER THE OWNER AT THE OWNER'S DISCRETION.

KEYED NOTES:

1. CIRCUIT NUMBERS ARE PROVIDED FOR REFERENCE ONLY. CONTRACTOR SHALL CONFIRM CIRCUITRY BY TRACING CIRCUITS BACK TO THEIR SOURCE PRIOR TO DEMOLITION.
2. DEMOLISH THE CIRCUIT AND ASSOCIATED SAFETY SWITCH OR STARTER IN ITS ENTIRELY BACK TO THE SOURCE PANEL AND TO THE EQUIPMENT IT SERVES.

SHEET NOTE:

1. UPDATE EXISTING PANEL DIRECTORIES WITH NEW WORK PROVIDED UNDER THIS CONTRACT. ELECTRICIAN SHALL KNOW THAT EXISTING PANELS ARE 240V 3-PHASE HI-LEG CONFIGURATION.

ATKINS

482 SOUTH KELLER ROAD
ORLANDO, FL 32810
PHONE: 407.647.7275 FAX: 407.740.8958

CONSULTANT:

CLIENT:

PROJECT NAME:

Orange County John Bridges Community Center Buildings D & F HVAC Replacement

445 W 13th Street Apopka, Fl 32703

100045176

No.	Date	Description

ISSUE LOG

PROFESSIONAL SEALS:

SHEET TITLE:

BLDG D ELECTRICAL DEMO PLAN

SHEET INFORMATION:

JOB No. 100045178		Date Issued:	OCTOBER 25, 2015
Designed By:	LF	Sheet Number:	ED-101
Checked By:	FL		
QC Review:	GFH		
Phase:			

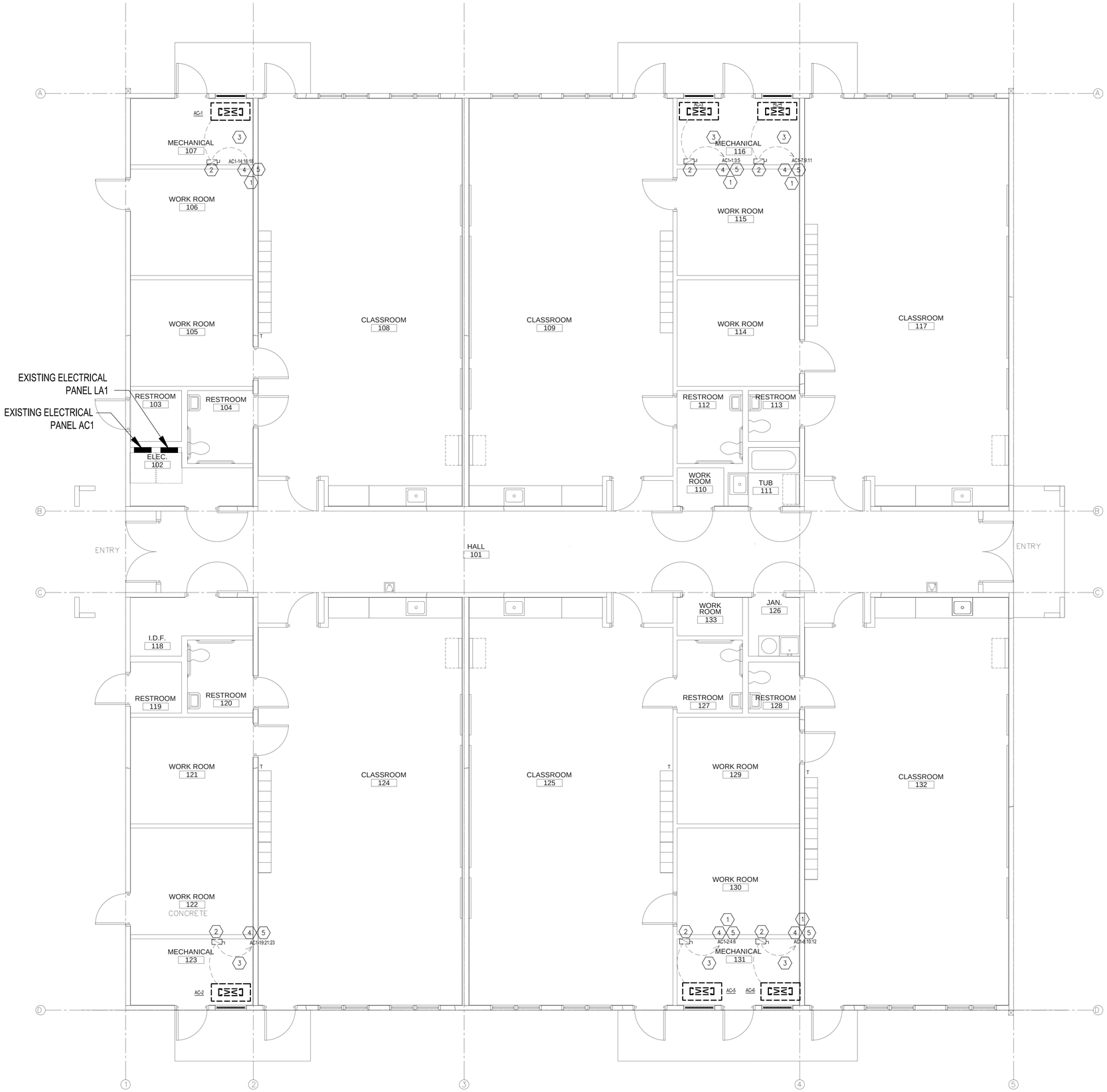

A **BLDG F ELECTRICAL DEMO PLAN**

SCALE: 1/4" = 1'-0"

GENERAL NOTES:

1. ALL DEVICES AND EQUIPMENT SHOWN ON THIS PLAN ARE EXISTING. REFER TO SYMBOL LEGEND FOR DESCRIPTION.
2. EXISTING CONDITIONS SHOWN ON THESE DRAWINGS ARE BASED ON ORIGINAL DRAWINGS AND FIELD INVESTIGATION. ALL EXISTING CONDITIONS MUST BE CONFIRMED PRIOR TO BID. FIELD CONDITIONS SHALL GOVERN IN CASE OF DISCREPANCIES.
3. ALL CONDUITS/ RACEWAYS SERVING OTHER AREAS THAT RUN THROUGH THE PROJECT AREA SHALL REMAIN ACTIVE DURING THE CONSTRUCTION, SO AS NOT TO CAUSE ANY DISRUPTION TO THESE OTHER SPACES. IT IS THE CONTRACTOR'S RESPONSIBILITY TO ENSURE THAT ALL CONDUITS, NEW OR EXISTING, WITHIN THE PROJECT AREA ARE PROPERLY SUPPORTED AND PROVIDE WITH BONDING BUSHINGS IN ACCORDANCE WITH THE NATIONAL ELECTRICAL CODE.
4. ALL ITEMS REMOVED DURING THIS PROJECT SHALL BE DISPOSED OF OR TURNED OVER THE OWNER AT THE OWNER'S DISCRETION.

KEYED NOTES:

1. CIRCUIT NUMBERS ARE PROVIDED FOR REFERENCE ONLY. CONTRACTOR SHALL CONFIRM CIRCUITRY BY TRACING CIRCUITS BACK TO THEIR SOURCE PRIOR TO DEMOLITION.
2. DEMOLISH SAFETY SWITCH OR STARTER.
3. DEMOLISH CONDUCTORS FOR ASSOCIATED CIRCUIT IN ITS ENTIRELY BACK TO THE SOURCE PANEL AND TO THE EQUIPMENT IT SERVES.
4. RE-USE CONDUIT AND PROVIDE NEW CONDUCTORS REFER TO SHEET E-102 FOR MORE INFORMATION.
5. RE-USE BREAKER IN EXISTING PANEL AC1 LOCATED IN ELECTRICAL ROOM 102 REFER TO SHEET E-102 FOR MORE INFORMATION.

SHEET NOTE:

1. UPDATE EXISTING PANEL DIRECTORIES WITH NEW WORK PROVIDED UNDER THIS CONTRACT.

ATKINS
482 SOUTH KELLER ROAD
ORLANDO, FL 32810
PHONE: 407.647.7275 FAX: 407.740.8958

CONSULTANT:

CLIENT:

PROJECT NAME:

Orange County John Bridges Community Center Buildings D & F HVAC Replacement

445 W 13th Street Apopka, Fl 32703

100045176

No.	Date	Description

ISSUE LOG

PROFESSIONAL SEALS:

SHEET TITLE:

BLDG F ELECTRICAL DEMO PLAN

SHEET INFORMATION:

JOB No. 100045178		Date Issued:	OCTOBER 25, 2015
Designed By:	LF	Sheet Number:	ED-102
Checked By:	FL		
QC Review:	GFH		
Phase:			

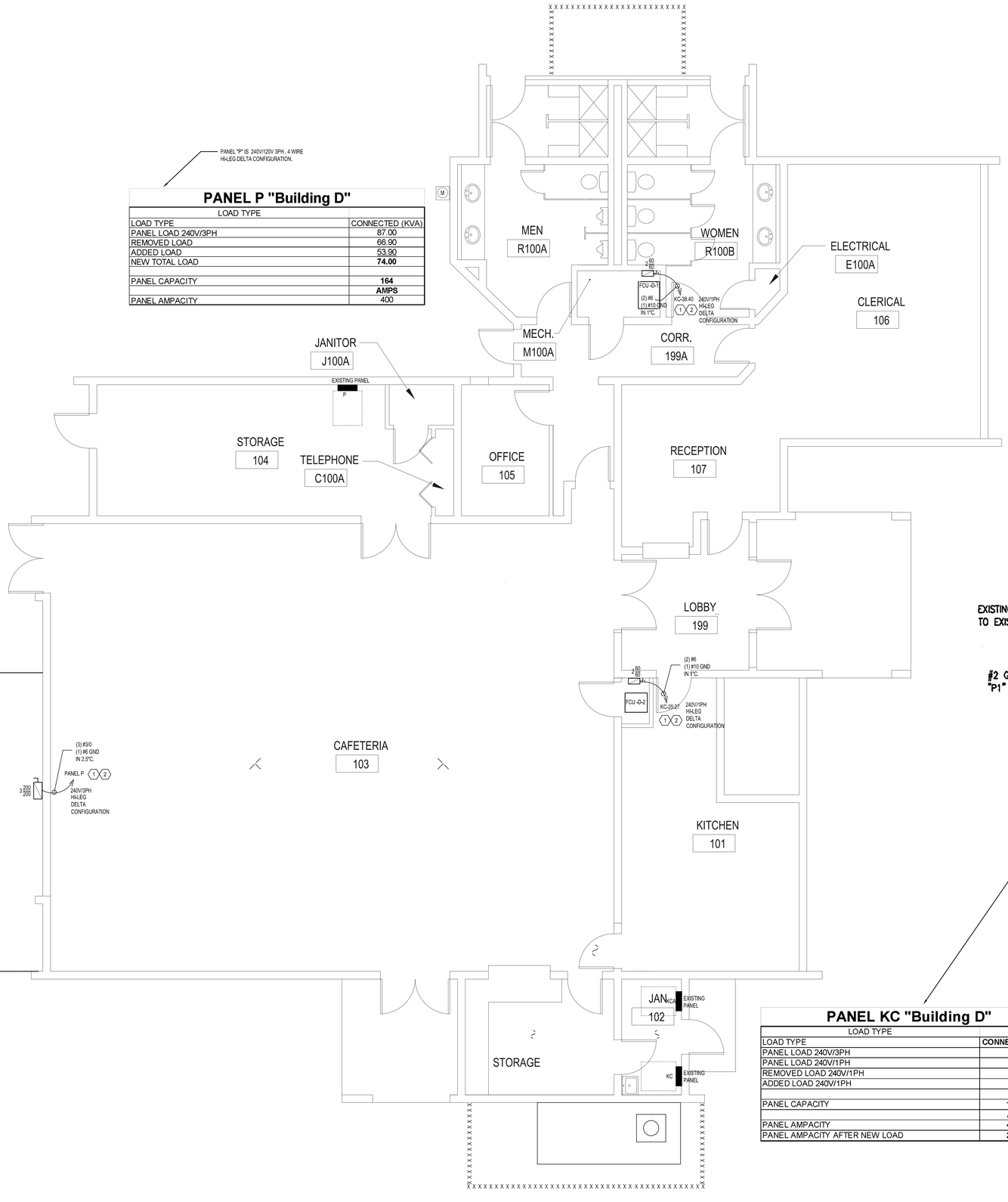

PANEL "P" IS 240V/120V 3PH , 4 WIRE HI-LEG DELTA CONFIGURATION.

PANEL P "Building D"

LOAD TYPE	
LOAD TYPE	CONNECTED (KVA)
PANEL LOAD 240V/3PH	87.00
REMOVED LOAD	66.90
ADDED LOAD	53.90
NEW TOTAL LOAD	**74.00**
PANEL CAPACITY	**164**
	AMPS
PANEL AMPACITY	400

SHEET GENERAL NOTES:

1. UPDATE EXISTING PANEL DIRECTORIES WITH NEW WORK PROVIDED UNDER THIS CONTRACT.
2. ALL DISCONNECTS WITHIN MECHANICAL ROOM M100A SHALL BE RATED NEMA 3R.
3. CONTRACTOR SHALL KNOW THAT PANELBOARDS ARE 240V/120V 3PH , 4WIRE HI-LEG DELTA CONFIGURATION. AND CIRCUITING SHALL BE DONE CAREFULLY TO AVOID ANY HAZARD.

SHEET KEY NOTES:

1. DEMOLISH EXISTING CIRCUIT BREAKER AND INSTALL NEW 60AMP, 2 POLE CIRCUIT BREAKER IN EXISTING PANELBOARD KC LOCATED IN JANITOR RM 102 SIZED AS SHOWN IN THE DRAWINGS. CIRCUIT BREAKERS SHALL HAVE AN AIC RATING GREATER OR EQUAL TO THE PANELBOARD.
2. DEMOLISH EXISTING CIRCUIT BREAKER AND INSTALL NEW 200AMP, 3 POLE CIRCUIT BREAKER IN EXISTING 400AMP PANELBOARD P LOCATED IN STORE ROOM 104. SIZED AS SHOWN IN THE DRAWINGS. CIRCUIT BREAKER SHALL HAVE AN AIC RATING GREATER OR EQUAL TO THE PANELBOARD.
3. PROVIDE NEW CONDUIT AND CONDUCTORS AS SHOWN.

ONE-LINE GENERAL NOTES:

1. EXISTING EQUIPMENT IS SHOWN FOR INFORMATION PURPOSES ONLY AND SHALL REMAIN AS IS , UNLESS NOTED OTHERWISE.
2. DRAWINGS ARE BASED ON EXISTING DRAWINGS FROM "S.G.M ENGINEERING, INC" DATED 09/03/2002. CONTRACTOR SHALL FIELD VERIFY EXISTING CONDITIONS AND CONTACT CONTRACTING OFFICER IF DISCREPANCIES ARE FOUND.

CONTRACTOR SHALL FIELD VERIFY VOLTAGES FORM THE HI-LEG DELTA CONFIGURATION AND ADJUST ACCORDINGLY.

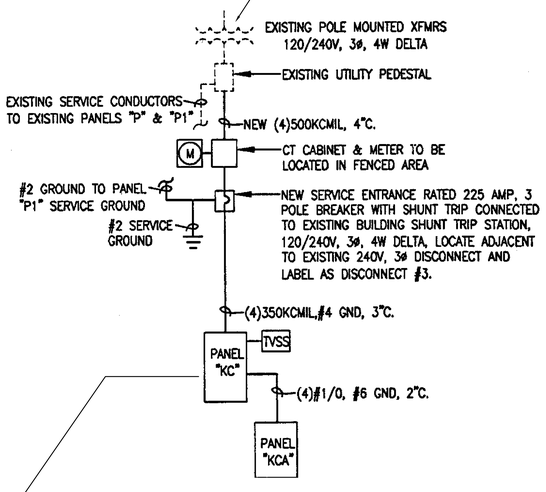

EXISTING ONE-LINE DIAGRAM

PANEL KC IS 240V/120V 3PH , 4 WIRE HI-LEG DELTA CONFIGURATION.

PANEL KC "Building D"

LOAD TYPE	
LOAD TYPE	**CONNECTED (KVA)**
PANEL LOAD 240V/3PH	63.00
PANEL LOAD 240V/1PH	19.90
REMOVED LOAD 240V/1PH	9.90
ADDED LOAD 240V/1PH	20.90
PANEL CAPACITY	**164.00**
	AMPS
PANEL AMPACITY	400.00
PANEL AMPACITY AFTER NEW LOAD	**280.48**

A **BLDG D NEW WORK ELECTRICAL PLAN**

SCALE: 1/4" = 1'-0"

N

ATKINS

482 SOUTH KELLER ROAD
ORLANDO, FL 32810
PHONE: 407.647.7275 FAX: 407.740.8958

CONSULTANT:

CLIENT:

PROJECT NAME:

Orange County John Bridges Community Center Buildings D & F HVAC Replacement

445 W 13th Street Apopka, Fl 32703

100045176

No.	Date	Description

ISSUE LOG

PROFESSIONAL SEALS:

SHEET TITLE:

BLDG D NEW WORK ELECTRICAL PLAN

SHEET INFORMATION:

JOB No.	**100045178**	Date Issued:	OCTOBER 25, 2015
Designed By:	LF	Sheet Number:	**E-101**
Checked By:	FL		
QC Review:	GFH		
Phase:			

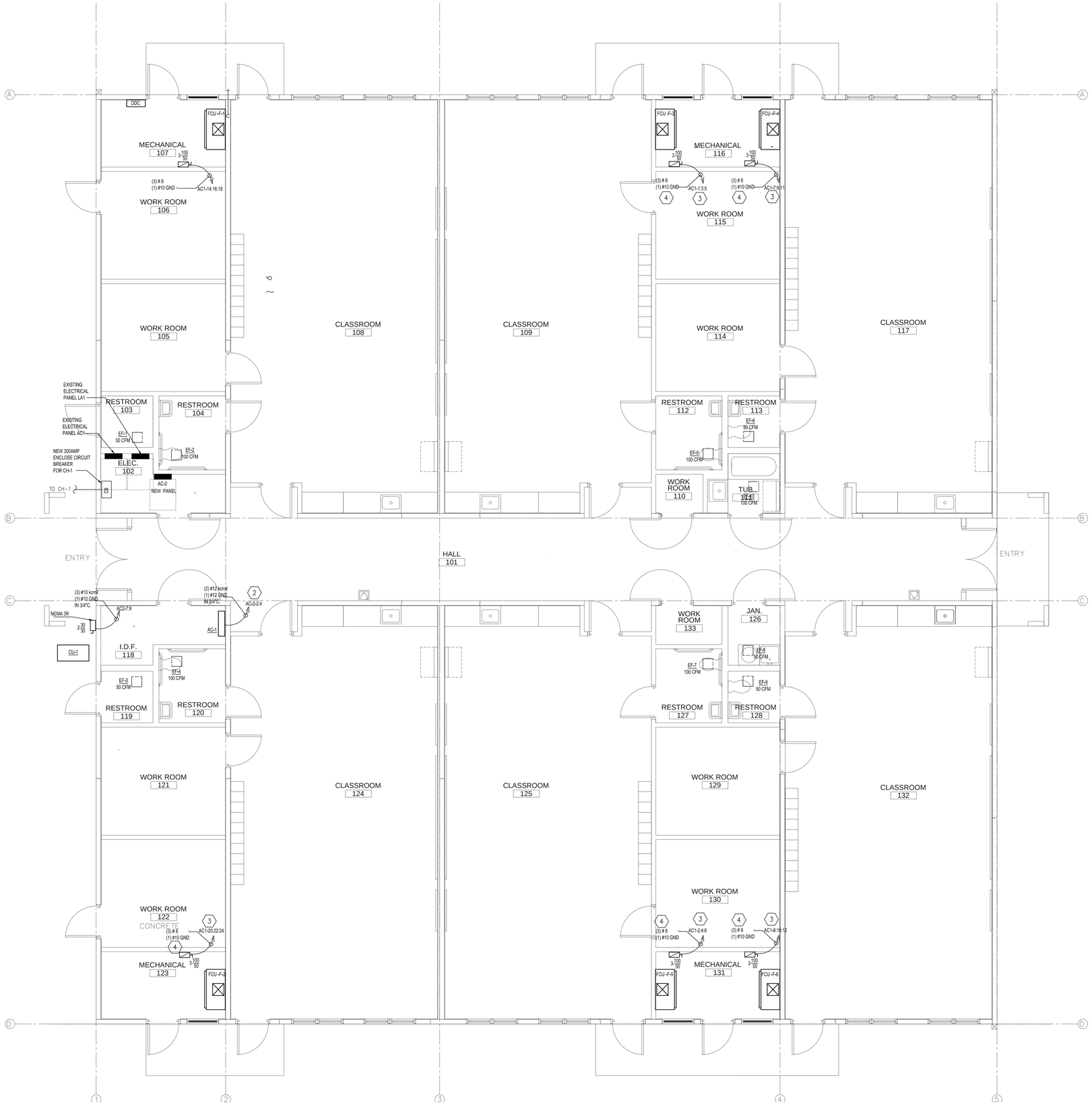

A **BLDG F NEW WORK ELECTRICAL PLAN**

SCALE: 1/4" = 1'-0"

N

SHEET NOTE:

1. UPDATE EXISTING PANEL DIRECTORIES WITH NEW WORK PROVIDED UNDER THIS CONTRACT.
2. ALL DISCONNECTS WITHIN MECHANICAL ROOMS 107,116,123,131 SHALL BE RATED NEMA 3R.

KEY NOTES:

1. INSTALL NEW 35AMP, 3 POLE CIRCUIT BREAKER IN EXISTING PANELBOARD AC1 LOCATED IN ELECTRICAL RM 102 SIZED AS SHOWN IN THE DRAWINGS. CIRCUIT BREAKERS SHALL HAVE AN AIC RATING GREATER OR EQUAL TO THE PANELBOARD.
2. INSTALL NEW 20AMP, 2 POLE CIRCUIT BREAKER IN EXISTING PANELBOARD AC1 LOCATED IN ELECTRICAL RM 102 SIZED AS SHOWN IN THE DRAWINGS. CIRCUIT BREAKERS SHALL HAVE AN AIC RATING GREATER OR EQUAL TO THE PANELBOARD.
3. REUSE EXISTING 50AMP, 208VOLT, 3POLES CIRCUIT BREAKER IN EXISTING 600AMP PANELBOARD AC1 LOCATED IN ELECTRICAL RM 102.
4. PROVIDE CONDUCTORS AS SHOWN.

ATKINS

482 SOUTH KELLER ROAD
ORLANDO, FL 32810
PHONE: 407.647.7275 FAX: 407.740.8958

CONSULTANT:

CLIENT:

PROJECT NAME:

Orange County John Bridges Community Center Buildings D & F HVAC Replacement

445 W 13th Street Apopka, Fl 32703

100045176

No.	Date	Description

ISSUE LOG

PROFESSIONAL SEALS:

SHEET TITLE:

BLDG F NEW WORK ELECTRICAL PLAN

SHEET INFORMATION:

JOB No. 100045178		Date Issued:	OCTOBER 25, 2015
Designed By:	LF	Sheet Number:	E-102
Checked By:	FL		
QC Review:	GFH		
Phase:			

MAIN DISTRIBUTION BOARD

Name: AC1 (EXISTING)

MAIN BREAKER: 600 AMPS 3 POLE 3 PHASE
MAIN LUGS: AMPS 4 WIRE
A.I.C. : AMPS X 208Y/120V
SURFACE MTD: X 480Y/277V
FLUSH MTD: 240/120V

Project Name:
Project Number:
Fed From:

NOTES	CKT NO	IDENTIFICATION	CODE	LOAD/PHASE (KVA) A	B	C	CIRCUIT BREAKER TRIP	POLES	POLES	TRIP	LOAD/PHASE (KVA) A	B	C	CODE	IDENTIFICATION	CKT NO	NOTES
2	1	FCU-F-3	H	3.8			50	3	3	50	3.8			H	FCU-F-5	2	2
	3		H		3.8		--	--	--	--		3.8		H		4	
	5		H			3.8	--	--	--	--			3.8	H		6	
2	7	FCU-F-4	H	3.8			50	3	3	50	3.8			H	FCU-F-6	8	2
	9		H		3.8		--	--	--	--		3.8		H		10	
	11		H			3.8	--	--	--	--			3.8	H		12	
3	13	AC-2	M	3.5			45	3	3	50	3.8			H	FCU-F-1	14	
	15	--	M		3.5		--	--	--	--		3.8		H		16	
	17	--	M			3.5	--		--	--			3.8	H		18	
2	19	FCU-F-2	H	3.8			50	3	1	125	8.6			O	PANEL LA1	20	
	21		H		3.8		--	--	--	--		8.6		O	--	22	
	23		H			3.8	--	3	--	--			8.6	O	--	24	
	25	TVSS						3	3	50	5.7			O	LIFT STATION	26	
	27						--	--	--	--		5.7		O	--	28	
	29						--	--	--	--			5.7	O	--	30	
	31																
	33																
	35																
	37								3	300	32.8			C	CH-1	38	1,3
	39								--	--		32.8		C	--	40	
	41								--	--			32.8	C	--	42	
				14.9	14.9	14.9					58.5	58.5	58.5				

	CONN. LOAD (KVA)	CONT. LOAD/NEC FACTOR	NEC REQ'D (KVA)
LIGHTING (L)	0.0	1.25	0.0
RECEPTACLES (R)	0.0	NEC	0.0
LARGEST MOTOR (M)	0.0	1.25	0.0
ALL OTHER MOTORS (M)	10.4	1.00	10.4
HEATING (H)	68.4	1.00	68.4
COOLING (C)	98.4	0.75	73.8
OTHER (O)	43.0	1.00	43.0
ELEVATOR (V)	0.0	1.00	0.0
SPARES (S)	0.0	1.00	0.0
DRYERS (D)	0.0	1.00	0.0
KITCHEN (K)	0.0	1.00	0.0

PANEL CONNECTED LOAD: 220.2 KVA
PANEL CAPACITY PER NEC: 195.6 KVA
SPARE CAPACITY: 0.0 KVA
TOTAL PANEL CAPACITY: 195.6 KVA
TOTAL PANEL AMPACITY: 543.6 AMPS

NOTES:
1. SUBFEED NEW 300AMP BREAKER FOR CH-1 BY TAPING THE BUS ON PANEL AC1. FIELD VERIFY PANEL PRIOR TO ANY WORK AND VERIFY WITH BEFORE PROCEEDING TO TAP THE BUS
2. REUSE EXISTING 50AMP,208VOLT, 3PHASE CIRCUIT BREAKER IN EXISTING PANELBOARD
3. 300 AMP BREAKER WILL BE OUTSIDE PANEL. IT WILL BE TREATED AS A SEPARATE ENCLOSE BREAKER.

PANEL AC1 "Building F"

LOAD TYPE	CONNECTED (KVA)
PANEL LOAD	134.10
REMOVED LOAD	91.20
ADDED LOAD	183.76
NEW TOTAL LOAD	226.66
PANEL CAPACITY	216.00

EXISTING PANEL AC1

Name: AC-2

MAIN BREAKER: AMPS 3 POLE 3 PHASE
MAIN LUGS: 125 AMPS 4 WIRE
A.I.C. : 10,000 AMPS X 208Y/120V
SURFACE MTD: 480Y/277V
FLUSH MTD: 240/120V

Project Name:
Project Number:
Fed From: AC-1

CKT NO	IDENTIFICATION	CODE	LOAD/PHASE (KVA) A	B	C	CIRCUIT BREAKER TRIP	POLES	POLES	TRIP	LOAD/PHASE (KVA) A	B	C	CODE	IDENTIFICATION	CKT NO
1	CHWP-2 (REDUNDANT PUMP)	M	0.0			35	3	2	20	0.2			O	AC-1	2
3	--	M		0.0		--	--	--	--		0.2		O	--	4
5	--	M			0.0	--	--								6
7	CU-1	O	1.9			30	2	1	20						8
9	--	O		1.9		--	--	1	20						10
11						20	1	1	20						12
13	CHWP-1	M	2.1			35	3	1	20						14
15	--	M		2.1		--	--	1	20						16
17	--	M			2.1	--	--	1	20						18
19						20	1	1	20						20
21						20	1	1	20						22
23						20	1	1	20						24
25						20	1	1	20						26
27						20	1	1	20						28
29															30
31															32
33														--	34
35														--	36
37														--	38
39														--	40
41														--	42
			4.0	4.0	2.1					0.2	0.2	0.0			

	CONN. LOAD (KVA)	CONT. LOAD/NEC FACTOR	NEC REQ'D (KVA)
LIGHTING (L)	0.0	1.25	0.0
RECEPTACLES (R)	0.0	NEC	0.0
LARGEST MOTOR (M)	0.0	1.25	0.0
ALL OTHER MOTORS (M)	6.3	1.00	6.3
HEATING (H)	0.0	1.00	0.0
COOLING (C)	0.0	1.00	0.0
OTHER (O)	4.1	1.00	4.1
ELEVATOR (V)	0.0	1.00	0.0
SPARES (S)	0.0	1.00	0.0
DRYERS (D)	0.0	1.00	0.0
KITCHEN (K)	0.0	1.00	0.0

PANEL CONNECTED LOAD: 10.4 KVA
PANEL CAPACITY PER NEC: 10.4 KVA
SPARE CAPACITY: 0.0 KVA
TOTAL PANEL CAPACITY: 10.4 KVA
TOTAL PANEL AMPACITY: 29.0 AMPS

NOTES:

ATKINS
482 SOUTH KELLER ROAD
ORLANDO, FL 32810
PHONE: 407.647.7275 FAX: 407.740.8958

CONSULTANT:

CLIENT:

PROJECT NAME:

Orange County John Bridges Community Center
Buildings D & F HVAC Replacement
445 W 13th Street Apopka, Fl 32703
100045176

No.	Date	Description

ISSUE LOG

PROFESSIONAL SEALS:

SHEET TITLE:

ELECTRICAL SCHEDULES

SHEET INFORMATION:

JOB No. 100045178 Date Issued: OCTOBER 25, 2015
Designed By: LF
Checked By: FL
QC Review: GFH
Phase:
Sheet Number: **E-501**